Final Report

A project under the Canada-New Brunswick Conservation and Renewable Energy Demonstration Program

Telephone 506 454-4363

MARITIME FOREST RANGER SCHOOL

R. R. No. 5

FREDERICTON, N. B.

E3B 4X6

WOOD CHIP BOILER MODIFICATIONS
FREDERICTON, N.B.

PROJECT MANAGEMENT

MARITIME FOREST RANGER SCHOOL

FREDERICTON, N.B.

REPORT COMPILED BY

ADI LIMITED

1982

REGISTERED PROFESSIONAL ENGINEER
#2565
J. G. Davis
17/09/82
PROVINCE OF NEW BRUNSWICK

Canada/New Brunswick Conservation and Renewable Energy Demonstration Program

The Conservation and Renewable Energy Demonstration Program is administered in New Brunswick by the Energy Secretariat and managed jointly with Energy, Mines and Resources Canada. The Program is designed to help demonstrate promising conservation and renewable energy technologies, to develop public awareness and understanding of these technologies, and to create employment in new or existing industries.

Through over 100 demonstration projects in New Brunswick, a wide variety of conservation and renewable energy technologies have proven to be technically sound and economically attractive. These demonstration projects should now provide a catalyst for commercialization and lead to widespread adoption of many of these proven technologies.

This final report is based on a project which was financially supported by the Energy Demonstration Program. For further information on other demonstration projects funded in New Brunswick under this program, contact:

Conservation & Renewable
Energy Division
Energy Secretariat
P.O. Box 6000
Fredericton, N.B.
E3B 5H1
(506) 453-3897

Programme Canada/Nouveau-Brunswick de démonstration des économies d'énergie et des énergies renouvelables

Le Programme de démonstration des économies d'énergie et des énergies renouvelables est administré au Nouveau-Brunswick par le Secrétariat à l'énergie, en collaboration avec Energie, Mines et Ressources Canada. Ce programme tente d'abord de vérifier la fiabilité des techniques de conservation d'énergie, d'accroître la sensibilité du public envers ces techniques et, enfin, de favoriser la création d'emplois au sein des industries nouvelles ou déjà existantes.

Un grand nombre de projets de démonstration se sont avérés à la fois techniquement réalisables et économiquement attrayants.

Le succès ainsi rencontré encourage la commercialisation des procédés les plus accessibles. Cela entraînerait certes l'adoption d'un grand nombre de ces techniques par les propriétaires de domiciles et par l'industrie privée.

Ce rapport final est basé sur un projet qui a reçu une aide financière du Programme de démonstration. Pour de plus amples renseignements, communiquez avec la:

Division des économies d'énergie
et des énergies renouvelables
Secrétariat à l'énergie
C.P. 6000
Fredericton, N.-B.
E3B 5H1
(506) 453-3897

DISCLAIMER

This report, funded by the New Brunswick Energy Secretariat and Energy, Mines and Resources Canada, is published as a public service for the information of the public. The parties do not, however, warrant the accuracy of its contents and cannot guarantee or assume any liability for the effectiveness of economic benefits of the devices and processes described in the report or that their use does not infringe privately-owned rights.

DENI DE RESPONSABILITE

Ce rapport, financé conjointement par le Secrétariat à l'énergie du Nouveau-Brunswick et Energie, Mines et Ressources Canada, est publié à titre de service public. Les gouvernements fédéral et provinciaux n'assurent aucunement l'exactitude du contenu, l'efficacité des appareils et des procédés et, enfin, les économies que préconise le rapport. L'utilisation de ces systèmes de conservation d'énergie ne doit, à aucun moment, empiéter sur les droits d'autrui.

Energy, Mines and Resources Canada | Énergie, Mines et Ressources Canada

New Brunswick Energy Secretariat

Wood Chip Boiler

Maritime Forest Ranger School

Project Summary

Canada/New Brunswick Conservation and Renewable Energy Demonstration Program

Project Location:
Fredericton
York County
New Brunswick

Project Manager:
Mr. W.L. McNamara
ADI Limited
Fredericton, N.B.

Date:
October, 1982

Project Number:
2013

Status:
Completed

Technology:
Wood-chips

Sector:
Institutional

Province:
New Brunswick

Purpose:

Demonstration of a renewable energy technology by making modifications to an existing wood chip boiler system for increased efficiency.

Description:

Modification to wood chip boiler system at the Maritime Forest Ranger School to improve functioning, expand range of usable cull wood, improve safety of operation and reduce fuel cost. A chip screen was installed between the chipper and the day storage bin.

Contributors:

Canada-New Brunswick:	$39,450
Maritime Forest Ranger School:	$13,150

Expected Benefits/Savings

- Reduced fuel bill is anticipated (compared to use of conventional oil); already 42% less before modifications.
- Forest management benefit through this demonstration of better use of wood waste.
- Widespread application in similar structures in small forest industries.

Further Information:

- pamphlet in both official languages;
- on-site tours;
- newsletters and bulletins;
- slide/tape presentation;
- final report

Information Contact:

Mr. G.A. Walsh
Maritime Forest Ranger School R.R. #5
Fredericton, N.B.
E3B 4X6

Telephone: (506) 454-4363

OR

Mr. Maurice Robichaud
Energy Secretariat
P.O. Box 6000
Fredericton, N.B. E3B 5H1

Telephone: (506) 453-3897

Project Title

Wood Chip Fired Boiler

Economic Analysis:

Project Costs

- Capital Equipment and Installation	$50,100
- Monitoring and Information Transfer	$ 2,500
Total Demonstration Costs	$52,600

Energy Impact: - 700 cords of top-grade wood at a cost of $35,000 per year. Replaced by a 50-50 mix of slabs and cull roundwood at a total cost of $12,250 resulting in an annual saving of $22,750 and a payback of 2.2 years.

Monitoring/Evaluation:

Monitoring to provide data related to pounds/hour consumption, moisture content of chips, equivalent oil consumption, dollar savings over present system.

Technical Details/Specifications:

DEVELOPMENTAL:

- Recirculated water from condensate-return tank through oil-fired back-up system;
- Replaced broken flights in storage bin drag chains and installed modified hold down pipes;
- Hinged wall of chip storage bin and installed hydraulic pistons;
- A second metering bin level control added and control location changed to eliminate control failures.

MODIFICATIONS:

- Install chip screen between chipper and storage bin and install dust collector.

Schematic Diagram:

1 Installed chip screen and blower to eliminate chip feeding problems.
2 Modified drag chains to improve effectiveness.
3 Installed hot water recirculation system to eliminate stand-by system from cycling on oil.
4 Installed second metering bin levelling control to eliminate failures.
5 Installed hinged bin wall panel to eliminate chip bridging problem.
6 Modified chip dryer to improve efficiency.
(in progress Sept. 81)

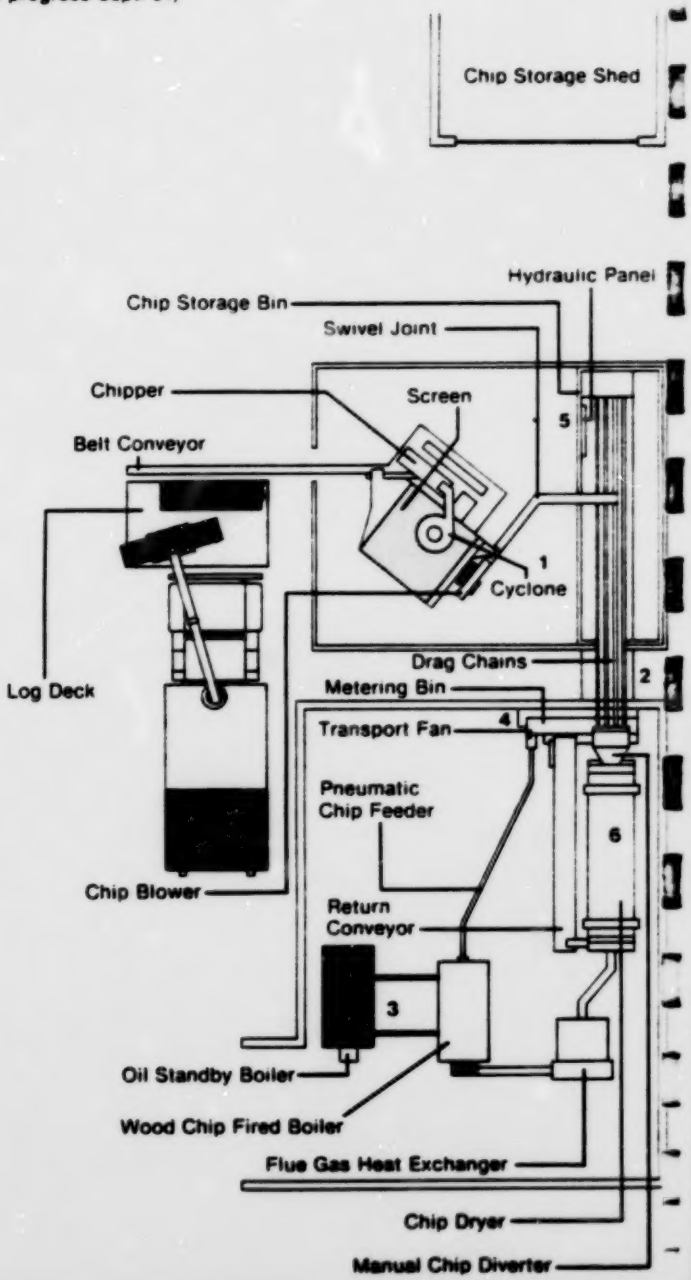

TABLE OF CONTENTS

	Page
EXECUTIVE SUMMARY	1
INTRODUCTION	3
TECHNICAL DESCRIPTION OF PROJECT	4
SYSTEM PERFORMANCE	14
SYSTEM PERFORMANCE MONITORING	16
PROJECT COST ACCOUNTING	22
COST BENEFIT ANALYSIS	23
ENVIRONMENTAL IMPACT	25
INFORMATION TRANSFER	26
CONCLUSIONS AND RECOMMENDATIONS	27

APPENDICES

LIST OF APPENDICES

APPENDIX 1 - PAPERS FOR INFORMATION TRANSFER

"Institutional Wood Chip-Fired Heating Plant Supply, Storage, Equipment, and Efficiency" - W.L. McNamara, ADI Limited

"Institutional Wood Chip-Fired Heating Plant" - W.L. McNamara, ADI Limited

"Wood Chip Boiler - Maritime Forest Ranger School" - New Brunswick Energy Secretariat

"Maritime Forest Ranger School Overview of Wood Chip-Fired Boiler Using Renewable Energy Resource" - Maritime Forest Ranger School

APPENDIX 2 - EQUIPMENT SPECIFICATIONS AND COST ESTIMATE

APPENDIX 3 - ENGINEERING DESIGN DRAWINGS

Drawing Title	Drawing Number
Screen (8½ x 11)	132-20 Figure 2
Wood Metering Bin Level Control	132-20-SK3
Wood Chip Screening Equipment (A1)	132-20-M1
Oil-Fired Boiler Preheating System	132-20-M2
Isometric Proposed Chip Bin Hinged Wall Panel Phase I	132-20-M3
Chip Bin Hinged Wall Panel - Mechanical and Structural Details	132-20-M4
Electrical & Hydraulic Circuit Details	132-20-M5
Modifications to Existing Chip Dryer	132-20-M6
Chip Screen Electrical	132-20-E1
Replacement Pneumatic Feed Hopper	132-20-100

EXECUTIVE SUMMARY

The wood chip-fired boiler system, presently in service at the Maritime Forest Ranger School, became operational for the 1978-'79 heating season. Operating experience during the first season of operation prompted several modifications which resulted in improved performance in the 1979-'80 heating season. Subsequent operating experience has indicated other potential areas for further improvement of plant reliability.

It also became apparent at that time that additional equipment could effectively expand the range of usable cull wood and thereby reduce fuel costs.

The major improvement required was the installation of a chip screen and dust collector to expand the range of usable cull wood and, at the same time, eliminate the risk of wood dust explosion. Cull wood was used during the 1979-'80 heating season, but it was necessary to choose culls selectively. The poorer culls broke and splintered when chipped, resulting in periodic obstructions in the chip handling and feed systems. Chipping culls created a high level of dust and required daily clean-up of the plant.

There also were several secondary items identified as developmental after the 1979-'80 heating season. These items were intended to improve both the functional reliability and safety of plant operation. These items are described in detail in the "Technical Description of Project" section.

Application for financial assistance to complete the above items was made in July 1980, and the project received approval in December 1980.

The chip screen and transport system was installed in December 1980, and after minor adjustments, became functional in January 1981. It was found that the addition of the screen virtually eliminated obstructions in the chip feed systems throughout the 1980-'81 and the 1981-'82 heating seasons. The dust collector was not installed due to inadequate space in the existing plant. The other items, regarded as developmental, contributed significantly to the functional reliability and safety of operation of the system. In general, all the various modifications and improvements contributed to a successful demonstration project.

The overall cost of the project was $31,740.11, and this resulted in a reduction of actual fuel cost per degree day of 7% in the 1981-'82 heating season as compared to the 1979-'80 season. This saving is significant when consideration is given to the fact that fuel oil costs have risen approximately 70% over the same period.

Also it can be seen in the "Cost Benefit Analysis" section that the screen installation considered alone represents a payback period of approximately one year.

As well as economic savings, the functional reliability of the plant was significantly improved, while at the same time, reducing the dependency on the oil-fired standby system.

SOMMAIRE EXECUTIF

Le système de chauffage à copeaux de bois, actuellement utilisé à l'Ecole des gardes-forestiers des Maritimes, est entré en opération lors de la saison de chauffage '78-'79. Au cours de la première saison de fonctionnement, les résultats de cette expérience ont entraîné plusieurs modifications, qui ont permis un meilleur rendement pour les saisons subséquentes. Des expériences ultérieures ont indiqué que d'autres améliorations au système augmenteront davantage la viabilité du projet.

A partir de cette constatation, il est devenu évident que le matériel additionnel requis permettrait l'utilisation d'une plus grande variété de résidus de bois, réduisant ainsi le coût du combustible.

Le perfectionnement du système a nécessité l'installation d'un tamis à copeaux et d'un collecteur de poussière en vue d'élargir le champ d'utilisation des déchets de bois, éliminant simultanément le risque d'explosion qu'occasionne la poussière provenant de ces déchets. Les résidus de bois furent utilisés lors de la saison de chauffage '79-'80. Il était important de bien les choisir car, les déchets de qualité inférieure se brisaient en éclats lors du déchiquetage, obstruant alors périodiquement les systèmes de manutention et d'alimentation des copeaux. Le déchiquetage des déchets produisait beaucoup de poussière nécessitant donc un dépoussièrage quotidien.

A la fin de la saison de chauffage '79-'80, plusieurs éléments secondaire nécessitaient des améliorations afin d'accroître la fiabilité et la sécurité du système. Ces modifications sont décrites en détails dans la section intitulée, "Description technique du projet."

La demande d'aide financière, en vue d'apporter les modifications requises, a été présentée en juillet 1980 et acceptée en décembre de la même année.

Le tamis à copeaux et le système de transport ont été mis en place au mois de décembre 1980. Après quelques ajustements mineurs, ils sont entrés en exploitation au mois de janvier 1981. Au cours des saisons de chauffage '80, '81 et '82, on a découvert que l'addition du tamis éliminait pratiquement toute obstruction dans les systèmes d'alimentation des copeaux. Le collecteur de poussière n'a pas été installé, étant donné le manque d'espace dans l'emplacement existant. Les autres éléments, à caractère expérimental, ont grandement contribué à la fiabilité et à la sécurité du système. En général, toutes les modifications et les améliorations apportés ont contribué à la réussite de ce projet de démonstration.

Le coût du projet a été de $31,740.11. Il a entraîné une réduction de 7 pour cent du coût réel de combustible par degré-jour au cours de la saison '81-'82. Cette économie s'avère d'autant plus importante lorsqu'on constate que les coûts du mazout ont connu une augmentation d'environ 70 pour cent pendant la même période.

Dans la section intitulée "Analyse des coûts et avantages", on remarque que l'installation du tamis à copeaux exige une période de recouvrement de seulement un an.

En plus des économies monétaires, l'éfficacité du système a été grandement améliorée, réduisant ainsi la dépendance sur le système de chauffage traditionnel.

INTRODUCTION

The Maritime Forest Ranger School has utilized wood as its primary heating energy source since construction of the facility in 1946. The fuel wood is harvested in conjunction with the forest management of the University of New Brunswick wood lots. The wood consists of defective trees, culled pulpwood and training sawmill residue, all of which is unmarketable.

Prior to 1978, the wood was fed manually in four-foot lengths to two natural draft boilers. This required full-time staffing during plant operation.

The present heating plant was completed in 1978 and was funded by the Canada-New Brunswick Subsidiary Agreement for Forestry. The purpose was to evaluate the feasibility of utilizing wood fuel in a fully automatic boiler plant. The intent was to utilize systems and techniques which would be transferable to other installations in the region. Operating experience gained during the 1978-'79 and 1979-'80 heating seasons indicated that the heating system was viable both from an operational and an economic standpoint. It was also clear that refinement of the existing system, additional equipment, and further monitoring would enhance functional reliability and safety of the plant. It was at this point that an application for funding assistance was made under the Conservation and Renewable Energy Demonstration Program.

TECHNICAL DESCRIPTION OF PROJECT

Items Included

The following is a list of the equipment additions and modifications proposed at the Maritime Forest Ranger School which were initially approved under the Conservation and Renewable Energy Demonstration Program. Refer to Figure 1 for plant layout.

1. Installation of a condensate recirculation system to preheat standby oil-fired boiler.

2. Modifications to storage bin drag chains.

3. Installation of movable panel on storage bin wall to break chip bridges.

4. Installation of a second metering bin level control and relocation of the existing control.

5. Installation of a stack spark arrestor.

6. Installation of a chip screen between the chipper and the storage bin to eliminate chip feeding problems.

7. Installation of a dust collection system to eliminate dust related hazards.

The following items were also included under the Conservation and Renewable Energy Demonstration Program but were approved subsequent to the initial proposal of July 1980.

8. Modifications to chip dryer for improved efficiency.

MARITIME FOREST RANGER SCHOOL
WOOD CHIP FIRED HEATING PLANT

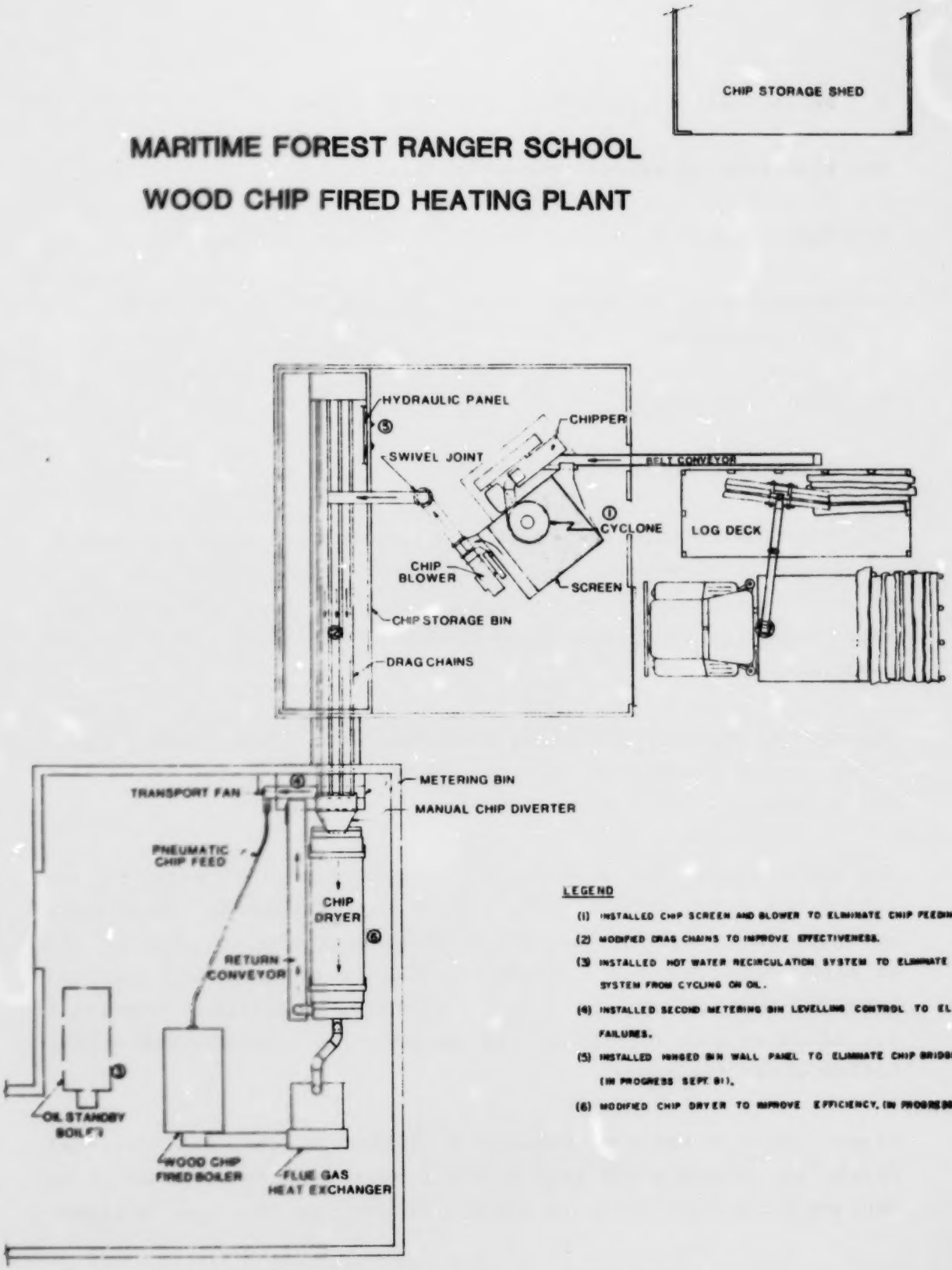

LEGEND

(1) INSTALLED CHIP SCREEN AND BLOWER TO ELIMINATE CHIP FEEDING PROBLEM

(2) MODIFIED DRAG CHAINS TO IMPROVE EFFECTIVENESS.

(3) INSTALLED HOT WATER RECIRCULATION SYSTEM TO ELIMINATE STAND-BY SYSTEM FROM CYCLING ON OIL.

(4) INSTALLED SECOND METERING BIN LEVELLING CONTROL TO ELIMINATE FAILURES.

(5) INSTALLED HINGED BIN WALL PANEL TO ELIMINATE CHIP BRIDGING PROBLEM (IN PROGRESS SEPT. 81).

(6) MODIFIED CHIP DRYER TO IMPROVE EFFICIENCY. (IN PROGRESS SEPT. 81)

FIGURE 1

9. Replacement of pneumatic chip feed hopper.

10. Reduction of excess combustion air.

11. Replacement of induced draft fan safety switch.

12. Installation of draft gauges for combustion air monitoring and adjustment.

Detailed Description

1. Condensate Recirculation System

The function of this system is to maintain the standby boiler at operating temperature. Initially the standby boiler was fired on oil periodically, and during the 1979-'80 heating season, this represented a fuel consumption of approximately 1900 gallons.

The system that was installed consisted of a circulation pump, a timer, and the necessary piping, valves, and fittings to connect the wood-fired and standby boilers.

The timer allows the pump to be energized periodically, circulating hot water from the wood-fired boiler through the standby boiler. This system has performed adequately to preheat the standby boiler but has a tendency to lower the residual chemical level in the standby boiler. Presently, additional chemicals are added to the standby boiler manually to maintain the proper boiler water treatment.

Since the two boilers require a different chemical residual level, it is suggested that a small heat exchanger be added to the recirculation loop in order to isolate the two boilers.

This, as well as some minor modifications to the existing chemical feed piping, would allow independent chemical treatment of the water in each boiler.

2. Modifications to Storage Bin Drag Chains

The storage bin drag chains required replacement of several flights to ensure continuous discharge. These were installed and were effective.

Secondly, the front and rear sprockets of the drag chain tended to become misaligned as a result of the freedom of the rear sprockets to travel laterally. The rear sprockets were originally intended to free-wheel on the cross-shaft which allowed the lateral movement. The addition of spacers and collars between each rear sprocket prevented this movement, eliminating the misalignment problems.

A third operational problem with the drag chains was that a short period after being adjusted, sufficient slack would develop to cause the return chain (upper) to sag. Eventually the flights on the return chain would interfere with the flights on the supply (lower) chain. Two chain rollers were added to support the return chain and the requirement for attention to chain tension was significantly reduced.

3. Installation of Movable Bin Panel

The wood chip storage bin is a rectangular shape in plan with one vertical side, one sloped side, and vertical ends. The drag chains run longitudinally in the bottom of the bin, and the discharge is at one end. An arrangement such as this tends to empty the bin beginning from the discharge end and progressing

toward the rear of the bin. This means that the level of chips in the bin is not lowered uniformly as the chips are discharged. As a result, an opportunity is presented for chip bridging or "ratholing" to occur. This is due to the characteristic property of wood chips to interlock. Without attention, a rathole will progress toward the rear of the bin until the drag chains are no longer in contact with chips, preventing discharge.

A hydraulically actuated panel on the bin wall, hinged at the top and swinging outward at the bottom, was installed to counteract this problem. It was installed on the rear portion of the bin wall since it was the furthest from the discharge end and, therefore, the last area to experience bridging problems. Since the panel was to be installed on a trial basis, only this one area of the bin wall was equipped with a movable section. This was done to minimize cost while still effectively evaluating the concept.

The movable panel system consists of a small hydraulic pump, motor, two hydraulic cylinders, solenoid-operated control valve, reservoir, filter, pressure relief valve, and the necessary hoses and fittings. It is equipped with limit switches to control panel movement and a timer to control the repeat cycle period.

The panel is actuated each time the drag chains are actuated. The drag chains are controlled by a level control switch in the metering bin. It completes one cycle of extension and retraction and then parks in the original position. In the event that the drag chains operate longer than ten minutes, the panel is automatically re-actuated for one cycle.

Operating experience throughout the 1981-'82 heating season has indicated the panel system effectively eliminates bridging problems in the rear portion of the bin. It is felt that it is a valid concept, and that one, or possibly two, more panels operating on the original hydraulic and control system would eliminate bridging in the remainder of the bin.

Prior to the decision to install the movable bin panel, vibration devices and air blasters were considered as solutions to the bridging problems. Based on information from manufacturers and literature on the subject, it was learned that these devices were not widely used in conjunction with wood chips.

Experiments were also performed using sheets of plywood in different configurations in an attempt to alter the slope of the storage bin sides. These experiments met with little success.

4. Second Metering Bin Level Control

A second diaphragm type high-level switch was added to the bin for positive level control for periods during which the dryer was in operation. Although not completely satisfactory, a significant increase in level control was achieved.

5. Installation of Spark Arrestor

After the proposal stage of the Demonstration Project, a decision was made to delete the spark arrestor installation. It became apparent that the installation of a spark arrestor was not feasible, primarily due to high capital cost. Excess air was also reduced during the project which resulted in a significant decrease in particulate carryover, reducing the need for the spark arrestor.

6. Installation of Chip Screen

In order to eliminate feed system blockages as a result of splinters from cull wood, a 72-inch square oscillating chip screen was installed. The cull wood is now fed through the chipper and exits into a cyclone located above the screen. The accepts are directed through a chute to a pneumatic blower which transports them either to the storage bin or to outside storage. The rejects are recycled through the chipper.

The screen installation has virtually eliminated chip feed blockages due to oversized and oblong chips during the 1980-'81 and 1981-'82 heating seasons.

7. Dust Collector Installation

After the proposal stage of the Demonstration Project, this item was deleted from the project. The main reason was a lack of space in the chipper room for installation of the necessary equipment.

8. Modifications to Chip Dryer

A cylindrical insert was installed in the center of the existing dryer to increase the area of chips in contact with the warm air from the stack gas heat exchanger. The insert is hollow and has six longitudinal fins equi-spaced about the circumference. It also has a series of holes between two adjacent fins to allow chips to enter the center portion of the insert. The insert is attached to the outer dryer shell and rotates concentrically with the dryer.

During operation, the chips enter the dryer as before and as the drum rotates, some of the chips fall on the new insert and are held there by the longitudinal fins. The chips progress toward the outlet of the dryer and are constantly falling from the insert to the perimeter of the original dryer and vice versa. The series of holes in the insert allows chips to enter the center section and also fall to the outside circumference of the dryer once per revolution. This arrangement increases the area of chips exposed to the warm air stream during the off-cycle, when the dryer is not rotating.

The inlet air duct was also relocated to a lower position on the discharge end of the dryer drum and a butterfly damper was added to act as a vane to direct the air toward the lower portion of the drum.

Tests were performed on the modified dryer during the 1981-'82 heating season with the following results:

	% Moisture (Wet Basis) Entering Dryer	% Moisture (Wet Basis) Leaving Dryer
20/01/82	28.0	27.0
17/02/82	34.2	30.0
18/02/82	39.0	37.0
08/03/82	35.5	32.8
26/03/82	35.7	34.5
31/03/82 (A.M.)	48.0	42.0
31/03/82 (P.M.)	54.0	48.0
06/04/82	44.6	40.0

The above figures generally indicate that a relatively insignificant degree of drying is achieved with chips entering the dryer at a moisture level below 40%. Normally, fuel wood at

MFRS is stored for one season before being chipped, and so a large portion of the fuel has a moisture content less than this level. Considering the electrical and maintenance costs associated with operating the dryer, it appears, from the results in the table, that the dryer should be considered for use only when chips with a moisture content above 40% are being used.

9. Replacement of Chip Feed Hopper

The original chip feed hopper, feeding the pneumatic blower from the metering bin auger, initially experienced periodic blockages with certain types of chips. A slightly redesigned hopper (Ref 132-20-100) was installed temporarily to eliminate the blockages.

The major difference between the redesigned hopper and the original was that more attention was given to the transition from the tapered hopper section to the round duct. The downstream edge of the hopper was chamfered, which enlarged the effective throat diameter slightly. Particular care was taken to grind the interior welds to ensure smooth material flow. The hopper has performed without problems, but was constructed of 28-gauge sheet metal and had sustained significant wear. It was in need of replacement during the 1981-'82 heating season after three seasons of operation. Since the design theory of the temporary unit had been proven, it was reproduced using 16-gauge galvanized sheet metal.

10. Reduction of Excess Air

Operating experience since the completion of the plant indicated that the combustion air dampers should be nearly closed for acceptable performance. This resulted in limited control over combustion air. The speed of the induced draft fan was reduced

by means of an adjustable sheave to produce the lowest airflow possible, but the situation did not improve significantly. On the basis of a theoretical combustion air requirement calculation, the original 7-inch diameter fixed fan sheave was replaced with a 9.75-inch diameter sheave. This reduced airflow sufficiently to allow manual modulation of the combustion air dampers. This added degree of combustion control now allows finer combustion air adjustments when using wood of various species and varying moisture contents.

11. Replacement of Induced Draft Fan Safety Switch

The original induced draft fan on the stack was equipped with a safety switch to interrupt chip feed to the boiler in the event of fan failure. The switch was located in the breeching with an actuator protruding into the stack gas stream. This arrangement was unreliable in that the hot stack gases caused the actuator linkage to bind, periodically rendering the switch inoperable.

A new switch was installed which operates on the principle of differential pressure. There are pressure sensing points located upstream and downstream of the induced draft fan. While the fan is in operation, a pressure differential exists and the switch is preset to maintain a closed circuit under this condition. If the fan stops as a result of any malfunction, the pressure differential no longer exists. This causes an open circuit condition and the chip feed is interrupted.

This system is not susceptible to corrosive stack gases, and since being installed during the 1981-'82 heating season, it has performed well.

12. Installation of Draft Gauges

Draft gauges were installed in conjunction with the reduction of excess combustion air described in Item 10 above. Coupled with the increased control over combustion air gained in Item 10, the addition of draft gauges was the next logical step. Draft gauges installed in the combustion chamber and breeching allow more accurate adjustment of combustion air dampers and optimization of overall efficiency.

SYSTEM PERFORMANCE

Performance results of test measurements taken during the normal heating seasons are summarized in Table 1. The test results are based on boiler steam output, as measured by boiler feedwater flow (with no blow-down), produced by a measured volume of chips. Random samples were taken from each test batch and measured for density and percent moisture content (wet basis). Test runs were made at normal load conditions with the combustion rate fluctuating between high and low fire over periods of one to three hours.

Calorimeter tests carried out on random samples of the chips indicated higher heat values for bone dry chips of between 7 700 Btu/lb and 9 500 Btu/lb. These values result in net heat values for chips containing 30% moisture of 5 060 Btu/lb and 6 320 Btu/lb, respectively.

The bulk of the wood fuel is air dried in outdoor storage yards for one season and produces chips with approximately 30% moisture by weight. The boiler has been found to operate well at this chip moisture content without further predrying. Successful operation has been demonstrated on green wood chips with over 50% moisture content.

Fuel consumption records for the years 1978 to 1982 are tabulated in Table 2. Using an average of 3000 lb per cord at 30% moisture content, the projected annual consumption of 760 cords at an output rate of 3000 Btu/lb represents the equivalent of approximately 250 000 litres (55 000 Imp. gal.) of oil.

TABLE 1 - PERFORMANCE SUMMARY

	No. of Test Runs	Average Chip Moisture	Average Boiler Output/lb Chips
1978/79	10	31%	2 750 Btu/lb
1979/80	7	28%	3 120 Btu/lb
1980/81	3	32%	3 030 Btu/lb
1981/82	4	30%	3 240 Btu/lb

TABLE 2 - ANNUAL CONSUMPTION

Year	Degree Days (°C) Sept. to April	Wood Consumption Cords	Wood Consumption lb x 1000 (est.)	Oil Litres
1978/79	4 392	207	620	154 000
1979/80	4 142	727	2 180	8 600
1980/81	4 422	743	2 230	20 366*
1981/82	4 463	694	2 080	12 473
Normal year:	4 323	760	2 280	5 000

*Most of this oil consumed during a January shutdown of wood-fired system for modifications to the chipper screen.

SYSTEM PERFORMANCE MONITORING

Description of Monitoring Procedure

For each test, the metering bin was filled level full with chips and the boiler was operated until the bin was empty.

A measured random sample of chips from each test loading was weighed on a laboratory scale, dried in an oven and re-weighed. The percent moisture content of the sample was determined on a wet basis.

The net heat value of each sample was estimated using average unit heat values determined by calorimeter tests performed on typical samples of chips from the various wood sources.

The boiler thermal output was determined by measuring the feedwater temperature and flow, and the steam pressure during the test run period (with no blow-down). The heat required to convert the measured quantity of water to steam under the measured conditions was then calculated using the difference in enthalpy between the feedwater and the discharge steam (see sample calculation).

The time of each run was also recorded. Several test runs were made during each heating season, and the total quantity of wood, as well as fuel oil, consumed during each season was recorded.

Tests were also performed with chip feed from storage routed through the drum dryer. Samples were taken, and the moisture content was determined for chips entering and leaving the dryer to determine dryer efficiency.

The performance of all components was tested using fuel wood varying from clean, air-dried hardwoods to mixed sawmill residue and rotting softwoods, with moisture contents varying from 18% to 44% by weight (Ref. Test Firing Results).

List of Monitoring Equipment Used:

Equipment	Manufacturer	Model Number
Metering Bin	Custom Fabricated	55 ft^3 Capacity
Scientific Scales	W.W. Welch Scientific	500 Grams Capacity
Laboratory Oven	Boekel	660 Watt
Feedwater Meter	Neptune Meter Co.	Model S
Steam Pressure Gauge	H.D. Treice Co. Ltd.	0-200 psi Range
Feedwater Thermometer	H.D. Treice Co. Ltd.	30-230°F Range

Summary of Calculations Performed:

1.0 Weight of Chips (Wet)

$$\text{Density of Chips } (lb/ft^3) = \frac{\text{Weight of Sample (lbs)}}{\text{Volume of Sample } (ft^3)}$$

$$\text{Full Metering Bin Load (lb)} = \text{Density } (lb/ft^3) \times \text{Bin Volume } (ft^3)$$

2.0 Moisture Content of Chips

$$\text{\% Moisture (Wet Basis)} = \frac{\text{(Wet Wt. of Sample)} - \text{(Dry Wt. of Sample)}}{\text{(Wet Wt. of Sample)}} \times 100$$

3.0 Energy Input to Boiler

$$\text{Net Fuel Heat Value (Btu/lb)} = [(1 - \text{\% Moisture}) \times (\text{Dry Heat Value (Btu/lb)})] - [(\text{\% Moisture}) \times (\text{Energy to Evaporate Water})]$$

$$\text{Net Boiler Input } Q_i \text{ (Btu)} = (\text{Net Fuel Heat Value (Btu/lb)}) \times (\text{Wt. of Full Metering Bin Load (lb)})$$

4.0 Boiler Thermal Output

Output Q_o (Btu) = (Wt. of Feedwater (lb)) x ($h_g - h_f$)

where h_f = Enthalpy of Feedwater (Btu/lb)

h_g = Enthalpy of Discharge Steam (Btu/lb)

5.0 Boiler Efficiency

$$\% \text{ Net Efficiency} = \frac{Q_o}{Q_i} \times 100$$

Sample Calculation:

Energy Input to Boiler

Net Fuel Heat Value (Btu/lb)

= [(1 - % Moisture) x (Dry Heat Value (Btu/lb))]

- [(% Moisture) x (Energy to Evaporate Water)]

where: % Moisture = 30 (chosen arbitrarily for sample calc.)

Dry Heat Value = 8600 Btu/lb (from tests)

Energy to Evaporate Water = 1100 Btu/lb

= [(1 - .30) x (8600)] - [(.30 x 1100)]

= 5690 Btu/lb.

Net Boiler Input, Q_i (Btu)

= Net Fuel Heat Value (Btu/lb) x Wt. of Full Metering Bin Load

where: Wt. of Full Metering Bin Load = Density (lb/ft^3) x Bin Volume

= 1000 lbs (chosen arbitrarily for sample calc.)

= 5690 Btu/lb x 1000 lb

= 5.69×10^6 Btu

Boiler Thermal Output

Output, Q_o (Btu) = (Wt. of Feedwater (lb)) x (h_g - h_f)

where h_g = Enthalpy of Steam at avg. pressure of 8 psig
= 1158 Btu/lb

h_f = Enthalpy of Feedwater at avg. temp. of 110°F
= 78 Btu/lb

Wt of Feedwater = 3000 lb (chosen arbitrarily for sample calc.)

= 3000 x (1158 - 78)

= 3.24×10^6 Btu

Boiler Efficiency

$$\% \text{ Net Efficiency} = \frac{Q_o}{Q_i} \times 100$$

$$= \frac{3.2 \times 10^6}{5.7 \times 10^6}$$

= 57%

MFRS WOOD CHIP FIRED BOILER

TEST FIRING RESULTS

TEST	DATE	WET DENSITY LB/FT^3	% MOIST. (WET BASIS)	TEST VOL. (FT^3)	DURATION TIME (HR)	NET HEAT VALUE (BTU/LB)	Q OUT (TOTAL) (10^6 BTU)	Q IN (TOTAL) (10^6 BTU)	AV'G EFF'CY (%)	BTU/LB FUEL
1	78-11-1	14	30	72	2.5	5690	3.25	5.73	57	3220
2	78-11-02	14	30	66	2.6	5690	2.11	5.26	40	2280
3	78-11-02	14	30	61	2.8	5690	3.08	4.86	63	3610
4	78-11-07	17.8	33.5	35	1.8	5350	2.16	3.33	65	3470
5	79-02-14	14	30	59	1.3	5690	2.47	4.70	53	2990
6	79-02-14	14	30	59	1.3	5690	2.21	4.70	47	2680
7	79-03-21	17.15	44	16	0.37	4320	0.25	1.19	21	890
8	79-03-28	13.57	31.9	36	1.2	5510	1.10	2.69	41	2250
9	79-03-29	14.36	27.5	43	1.6	5940	1.22	3.67	33	1980
10	79-03-29	15.07	21.0	17	0.63	6550	0.59	1.68	35	2300
1	80-02-08	18.1	34	55	2.7	5300	2.38	5.28	45	2390
2	80-02-11	13.8	26	55	2.0	6070	2.36	4.61	51	3110
3	80-02-13	11.4	18	55	1.3	6850	2.11	4.30	64	4420
4	80-03-10	16.8	32	55	1.6	5500	2.56	4.78	54	3100
5	80-03-10	16.8	32	55	1.6	5500	2.53	5.08	50	2740
6	80-03-20	14.4	27	55	0.92	5980	2.60	4.74	55	3280
7	80-03-31	13.0	24	55	2.7	6260	2.38	4.48	53	3330

TEST FIRING RESULTS

TEST	DATE	WET DENSITY LB/FT^3	% MOIST. (WET BASIS)	TEST VOL. (FT^3)	DURATION TIME (HR)	NET HEAT VALUE (BTU/LB)	Q OUT (TOTAL) (10^6 BTU)	Q IN (TOTAL) (10^6 BTU)	AV'G EFF'CY (%)	BTU/LB FUEL
1	81-03	19	34	55	3.0	5300	3.00	5.54	54	2870
2	81-03	13	30	55	3.0	5690	2.49	4.07	61	3480
3	81-03	13	30	55	3.0	5690	2.01	4.07	49	2810
1	81-11-12	13.7	33.3	55	2.5	5370	2.20	4.05	54	2900
2	81-11-13	13.7	32.5	55	3.0	5450	2.05	4.11	50	2700
3	82-01-20	14.7	28	55	2.0	5880	2.85	4.75	60	3520
4	82-01-22	14.7	28	55	2.17	5880	3.03	4.75	64	3750

PROJECT COST ACCOUNTING

PROJECT COST ACCOUNTING

The Demonstration Project was funded jointly by the Canada - New Brunswick Conservation and Renewable Energy Demonstration Program and the Maritime Forest Ranger School. The financial contributions of the two parties were 75 percent and 25 percent, respectively, of actual project cost.

The following is a listing of the various items included under the project and the total cost associated with each.

		Completion Date	Actual Cost
1.	Installation of condensate recirculation system	81/10/26	$ 1 335.99
2.	Modifications to storage bin drag chains	81/10/26	1 846.72
3.	Installation of movable panel on storage bin	81/12/08	8 270.51
4.	Installation of metering bin level control	81/10/26	489.11
5.	Installation of stack spark arrestor	Deleted	Nil
6.	Installation of chip screen	81/10/26	15 607.27
7.	Installation of dust collection system	Deleted	Nil
8.	Modification to chip dryer	81/12/08	2 509.57
9.	Replacement of pneumatic chip feed hopper	82/04/08	633.48
10.	Reduction of excess combustion air	82/05/31	650.00*
11.	Replacement of induced draft fan safety switch	82/05/31	98.34
12.	Installation of draft gauges	82/05/31	300.00*
			$31 740.99

*These amounts are approximate since final invoices for these items have not been received from the suppliers.

COST BENEFIT ANALYSIS

HEATING COSTS - SEPTEMBER TO APRIL INCLUSIVE

ACTUAL FUEL CONSUMPTION

Year	Degree Days (°C)	Wood (cds)	Cost	Oil (gals.)	Cost	Total Cost
1978/79	4 392	207	$ 4 562	33 840	$22 503	$27 065
1979/80	4 142	727	15 631	1 900	1 406	17 037
1980/81	4 422	743	13 904	4 481	4 164	18 068
1981/82	4 480	694	13 622	2 744	3 460	17 082

DEGREE DAY BASIS

Year	Degree Days (°C)	Total Cost	Cost/Degree Day	Avg Oil Cost/gal
1978/79	4 392	$27 065	$6.16	$0.665
1979/80	4 142	17 037	4.11	0.740
1980/81	4 422	18 068	4.09	0.929
1981/82	4 480	17 082	3.81	1.261

As can be seen from the above table, the cost per degree day has actually decreased by 7 percent in 1981-'82 as compared to 1979-'80. This reduction is attributed to the various additions and modifications included in the Demonstration Project, which was completed over the period from 1980 to 1982. Although difficult to identify individually, each of the Demonstration Project items contributed to this overall improvement in efficiency.

CURRENT OIL COST BASIS

The average oil price for 1981-'82 was $1.261 per gal.

If 1981-'82 oil price were applied to 1980-'81 consumption, the total heating cost of 1981-'82 would have been:	$19 555
Actual total cost 1981-'82 (including wood)	17 082
1981-'82 saving based on current oil and wood costs	2 473

Again, the saving determined on the current oil cost basis is attributed to the various items included in the Demonstration Project and reflects an overall improvement in plant efficiency.

Payback Analysis - Chip Screen

Consumption 700 cords/yr. @ $25.00	$17 500
Cost of 700 cords top-grade wood @ $50.00	35 000
Annual saving	$17 500
Cost of screen	$15 607
Payback time with interest @ 19%/yr	
= 1.1 years	

The Maritime Forest Ranger School has access to a minimum of 300 cords per year of slabs, at a delivered cost of $10.00 per cord. Approximately 50 cords of slabs are generated in the School training sawmill, thus making it possible to use a 50-50 mix of slabs and cull roundwood. Payback time for that mix would be:

350 cords roundwood @ $25.00	$8 750	
350 cords slabs @ $10.00	3 500	$12 250
Cost of 700 cords top-grade wood		35 000
Annual saving		$22 750
Cost of screen		15 607
Payback time with interest @ 19%/yr		
= 0.8 years		

ENVIRONMENTAL IMPACT

ENVIRONMENTAL IMPACT

Forest Management

"Like all forests in this region, the UNB forest needed, and still needs, weeding. It was weeded and is weeded thanks to the opportunity to make good use of the weeds and trash unmerchantable by normal standards. No dollar value has been assigned to the forest management benefit, but the value is reflected in the forest itself. The first UNB Forest Inventory, done in 1914, showed 17 000 cords of wood. From 1914 to 1975, 60 000 cords were cut and the 1975 inventory showed 50 000 cords."

Quoted from "Maritime Forest Ranger School Overview of Wood Chip-Fired Boiler Using a Renewable Energy Resource", October 1981.

Products of Combustion

During the course of the project, the excess combustion air was reduced as described previously, and the visible level of fly ash was reduced. Subsequent flue gas testing has indicated a carbon dioxide content in the range of 12 percent, using relatively dry fuel. Under these conditions, the stack gases appeared clean from visual inspection.

INFORMATION TRANSFER

INFORMATION TRANSFER

Included in Appendix 1 are several documents which have served to pass on information and experience gained from the chip fired boiler at the Maritime Forest Ranger School. The document entitled, "Institutional Wood Chip Fired Heating Plant Supply, Storage, Equipment, and Efficiency" was presented by W.L. McNamara of ADI Limited at the Bio-Energy Conference held in Winnipeg, Manitoba early in 1982.

The document entitled, "Institutional Wood Chip Fired Heating Plant" by W.L. McNamara of ADI Limited, was submitted for publication in Canadian Hospital Engineering Journal.

The document entitled "Wood Chip Boiler Maritime Forest Ranger School" was produced by the New Brunswick Energy Secretariat and has been available on site for distribution to visitors and interested parties.

The last document, entitled "Maritime Forest Ranger School Overview of Wood Chip Fired Boiler Using a Renewable Energy Resource" by the Maritime Forest Ranger School, also has been available on site for distribution to visitors and interested parties.

During the course of this project it has been estimated by the school staff that approximately 400 people have toured the plant.

CONCLUSIONS AND RECOMMENDATIONS

CONCLUSIONS AND RECOMMENDATIONS

Generally speaking, the overall functional reliability of the heating system was increased significantly during the course of the Demonstration Project. The items included under the "Technical Description" Section all contributed to this increase in varying degrees.

The primary objective of the project, which was to broaden the range of usable cull wood, was achieved satisfactorily. This was a result of the addition of the chip screen which, as an individual item, contributed significantly to plant reliability. It allowed the chip handling system to operate up to two months without blockage, virtually eliminating unscheduled interruptions.

Improvements to the chip storage system also improved reliability due to the reduction of chip bridging problems. The drag chain withdrawal system has always been a high-maintenance item requiring a disproportionate amount of attention compared to the remainder of the plant. It has been learned that the design of the storage bin and withdrawal system is a critical area in wood chip boiler plant design.

It presently appears that a bin with vertical or negatively-sloped sides and a hydraulically-actuated reciprocating bottom would be more acceptable on operational and maintenance points of view.

A second area which operational experience indicates a potential for improvement is the combustion chamber. It is felt that the addition of grates would facilitate ash removal, presently requiring a weekly shutdown. It is suggested, from observations of the combustion chamber during boiler operation, that some over-fire air should be retained for use in conjunction with the grates.

APPENDIX 1

INSTITUTIONAL WOOD CHIP FIRED HEATING PLANT
SUPPLY, STORAGE, EQUIPMENT AND EFFICIENCY

A Project under the
Conservation and Renewable
Energy Demonstration Program
for
Government of New Brunswick
and
Government of Canada

By ADI LIMITED

W. L. McNAMARA, P. ENG.

ADI Limited
Engineers, Architects,
Management Consultants,
Planners, Surveyors

INSTITUTIONAL WOOD CHIP FIRED HEATING PLANT

The Maritime Forest Ranger School at Fredericton, New Brunswick has utilized wood as its primary heating energy source since construction of the facility in 1946. The fuel wood is harvested in conjunction with the forest managment of the University of New Brunswick wood lots, and consists of defective trees, culled pulpwood and training sawmill residue, all of which is unmarketable, even as domestic fuel wood.

Prior to 1978 the wood was manually fed in four foot lengths to two natural draft boilers, requiring full time staffing of the plant during its operation.

The present plant was installed in 1978, funded by the Canada-New Brunswick Subsidiary Agreement-Forestry, to develop the feasibility of utilizing the wood fuel resource in a fully automatic boiler plant using systems and techniques which are transferable to other installations in the region. Operating experience in the 1978-79 and 1979-80 seasons indicated the viability of the system and the plant was adopted for further refinement and monitoring as a demonstration project under the Conservation and Renewable Energy Demonstration Program.

The present boiler plant, as illustrated in Figure 1, consists of:

- log deck receiving area and belt conveyor
- chipper with screen assembly and chip blower
- day storage bin with drag chain live bottom
- metering bin with variable speed screw conveyor extraction
- pneumatic chip feed to boiler
- wood-chip fired boiler of three pass, fire-tube design with 839 square feet (78 m^2) of heating surface
- flue gas heat exchanger and rotary drum dryer
- stand-by oil fired boiler
- an automatic control system to regulate the chip feed, shut down the chip fired boiler on failure of chip supply or boiler safety alarms, alarm the condition to the operator's residence, and automatically start the stand-by oil fired boiler

Figure 1

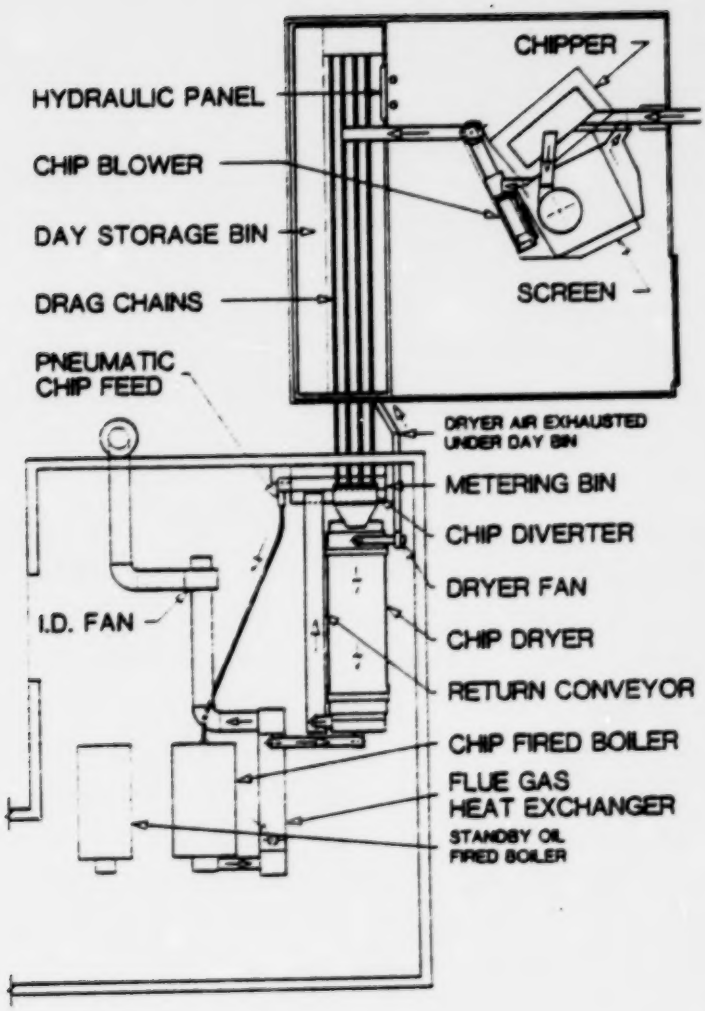
CHIPPER
HYDRAULIC PANEL
CHIP BLOWER
DAY STORAGE BIN
DRAG CHAINS
SCREEN
PNEUMATIC CHIP FEED
DRYER AIR EXHAUSTED UNDER DAY BIN
METERING BIN
CHIP DIVERTER
DRYER FAN
I.D. FAN
CHIP DRYER
RETURN CONVEYOR
CHIP FIRED BOILER
FLUE GAS HEAT EXCHANGER
STANDBY OIL FIRED BOILER

Refinements carried out under the Demonstration Program included:

- installation of the chipper screen to reduce the incidence of splinters and slivers from low grade cull wood obstructing the chip handling systems

- installation of a hydraulic panel in the day bin to eliminate bridging

- installation of a hot condensate circulation system to the stand-by oil fired boiler to reduce the oil consumption required to keep it in full stand-by status.

Performance results of test measurements taken during the normal heating seasons are summarized in Table 1. Test results are based upon boiler steam output, as measured by boiler feed-water flow (with no blow-down), produced by a measured volume of chips. Random samples were taken from each test batch and measured for density and percent moisture content (wet basis). Test runs were made at normal load conditions with the burning rate fluctuating between high and low fire over periods of one to three hours.

TABLE 1 - Performance

Year	No. of Test Runs	Average Chip Moisture	Average Boiler Output/lb chips
1978/79	10	31%	2 750 Btu/lb
1979/80	7	28%	3 120 Btu/lb
1980/81	3	32%	3 030 Btu/lb
1981/82	4	30%	3 240 Btu/lb

TABLE 2 - Annual Consumption

Year	° Days Sept. to Apr.	Wood Consumption Cords	1000 lb(est)	Oil Litres
1978/79	4 392	207	620	154 000
1979/80	4 142	727	2 180	8 600
1980/81	4 466	743	2 230	20 366*
Normal year:	4 323	760	2 280	5 000

*Most of this oil consumed during a January shut down of wood fired system for modifications to the chipper screen.

The bulk of the wood fuel is air dryed in outdoor storage yards for one season and produces chips with approximately 30% moisture by weight. The boiler has been found to operate well at this chip moisture content without further pre-drying. Operation has been shown to be possible on chips with over 50% moisture content if the load is such as to require a continuous high firing rate.

Fuel consumption records for the years 1978 to 1981 are tabulated in Table 2. Using an average of 3000 lb per cord at 30% moisture content, the projected annual consumption of 760 cords at the measured output rate of 3000 Btu/lb represents the equivalent of approximately 250 000 litres (55 000 imp. gal) of oil.

The wood used in this plant consists of low grade trees and forest debris which are removed as part of the wood lot management program, and for which no other local market exists. Their use as fuel provides a major economic benefit both to the wood lot management program and to the school energy costs.

The plant and its concepts are expandable to serve a proposed expanded building complex at the Maritime Forest Ranger School site. The larger plant would utilize wood from an expanded wood lot management program plus other wood waste materials from commercial operations in the area.

The concept is also applicable to other institutional and commercial facilities located in the vicinity of similar fuel sources.

INSTITUTIONAL WOOD CHIP FIRED HEATING PLANT

By
W. L. McNAMARA, P. ENG.

ADI Limited
P.O. Box 44
FREDERICTON, N.B.
E3B 4Y2

INSTITUTIONAL WOOD CHIP FIRED HEATING PLANT

The Maritime Forest Ranger School at Fredericton, New Brunswick has utilized wood as its primary heating energy source since construction of the facility in 1946. The fuel wood is harvested in conjunction with the forest management of the University of New Brunswick wood lots, and consists of defective trees, culled pulpwood and training sawmill residue, all of which is unmarketable, even as domestic fuel wood.

Prior to 1978 the wood was manually fed in four foot lengths to two natural draft boilers, requiring full time staffing of the plant during its operation.

The present plant was installed in 1978, funded by the Canada-New Brunswick Subsidiary AgreementForestry, to develop the feasibility of utilizing the wood fuel resource in a fully automatic boiler plant using systems and techniques which are transferable to other applications in the region.

Operating experience in the 1978-79 and 1979-80 seasons indicated the viability of the system and the plant was adopted for further refinement and monitoring as a demonstration project under the Conservation and Renewable Energy Demonstration Program for the Government of New Brunswick and The Government of Canada.

The present boiler plant is illustrated in Figure 1.

The plant contains an automatic control system to regulate the chip feed, shut down the chip fired boiler on failure of chip supply or on boiler safety alarms, alarm the condition to the operator's residence, and automatically start the stand-by oil fired boiler.

Performance results of test measurements taken during the normal heating seasons are summarized in Table 1. The test results are based on boiler steam output, as measured by boiler feed-water flow (with no blow-down), produced by a measured volume of chips. Random samples were taken from each test batch and measured for density and percent moisture

content (wet basis). Test runs were made at normal load conditions with the burning rate fluctuating between high and low fire over periods of one to three hours.

Calorimeter tests carried out on random samples of the chips indicated higher heat values for bone dry chips of between 7,700 Btu/lb and 9,500 Btu/lb. These values result in net heat values for chips containing 30% moisture of 5,060 Btu/lb and 6,320 Btu/lb, respectively.

Figure 1

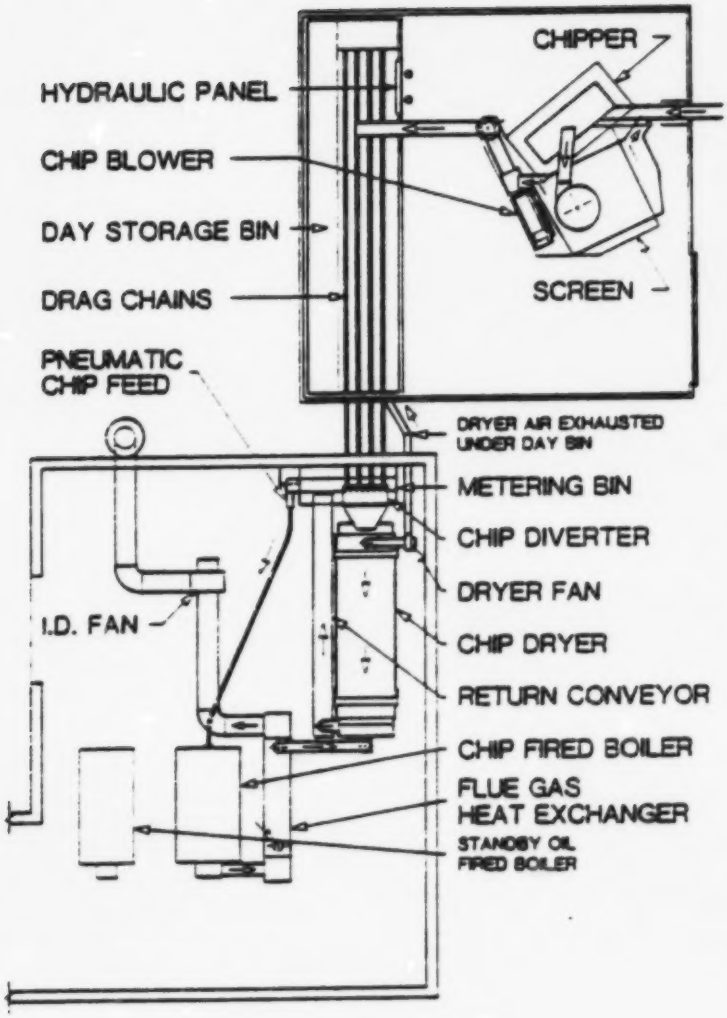
CHIPPER
HYDRAULIC PANEL
CHIP BLOWER
DAY STORAGE BIN
DRAG CHAINS
SCREEN
PNEUMATIC CHIP FEED
DRYER AIR EXHAUSTED UNDER DAY BIN
METERING BIN
CHIP DIVERTER
DRYER FAN
I.D. FAN
CHIP DRYER
RETURN CONVEYOR
CHIP FIRED BOILER
FLUE GAS HEAT EXCHANGER
STANDBY OIL FIRED BOILER

TABLE 1 - Performance

Year	No. of Test Runs	Average Chip Moisture	Average Boiler Output/lb chips
1978/79	10	31%	2 750 Btu/lb
1979/80	7	28%	3 120 Btu/lb
1980/81	3	32%	3 030 Btu/lb
1981/82	4	30%	3 240 Btu/lb

TABLE 2 - Annual Consumption

Year	Degree Days (°C) Sept. to Apr.	Wood Consumption Cords	1000 lb(est)	Oil Litres
1978/79	4 392	207	620	154 000
1979/80	4 142	727	2 180	8 600
1980/81	4 466	743	2 230	20 366*
Normal year:	4 323	760	2 280	5 000

*Most of this oil consumed during a January shut down of wood fired system for modifications to the chipper screen.

The bulk of the wood fuel is air dryed in outdoor storage yards for one season and produces chips with approximately 30% moisture by weight. The boiler has been found to operate well at this chip moisture content without further pre-drying. Successful operation has been demonstrated on green wood chips with over 50% moisture content.

Fuel consumption records for the years 1978 to 1981 are tabulated in Table 2. Using an average of 3000 lb per cord at 30% moisture content, the projected annual consumption of 760 cords at an output rate of 3000 Btu/lb represents the equivalent of approximately 250 000 litres (55 000 imp. gal) of oil.

The wood used in this plant consists of low grade trees and forest debris which are removed as part of the wood lot management program, and for which no other local market exists. The objective of the plant is to extract the heat value directly at a reasonable net operating efficiency, using relatively simple, unsophisticated equipment. The success of this plant provides a major economic benefit both to the wood lot management program and to the school energy costs.

The plant and its concepts are expandable to serve a proposed expanded building complex at the Maritime Forest Ranger School site. The larger plant would utilize wood from an expanded wood lot management program plus other wood waste materials from commercial operations in the area.

The concept of direct combustion of forest industry waste material is very viable in many areas in New Brunswick where the materials are often being disposed of at some cost to the industry.

With equipment presently available the concept is applicable to other institutions, including hospitals located near forest processing industries, and can provide substantially lowered fuel costs together with improved reliability of fuel supply.

Energy, Mines and Resources Canada | Énergie, Mines et Ressources Canada

New Brunswick Energy Secretariat

Wood Chip Boiler

Maritime Forest Ranger School

Project Summary

Canada/New Brunswick Conservation and Renewable Energy Demonstration Program

Project Location:
Fredericton
York County
New Brunswick

Project Manager:
Mr. W.L. McNamara
ADI Limited
Fredericton, N.B.

Date:
October, 1982

Project Number:
2013

Status:
Completed

Technology:
Wood-chips

Sector:
Institutional

Province:
New Brunswick

Purpose:

Demonstration of a renewable energy technology by making modifications to an existing wood chip boiler system for increased efficiency.

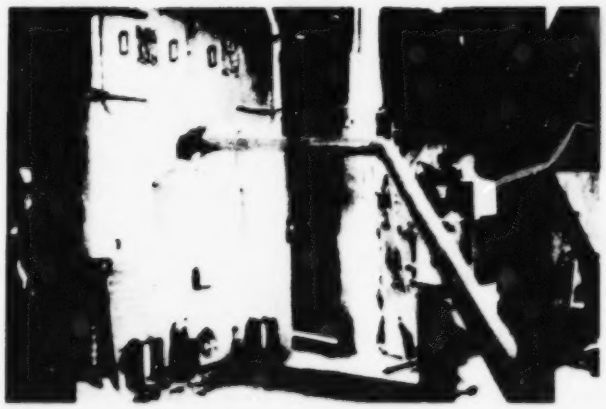

Description:

Modification to wood chip boiler system at the Maritime Forest Ranger School to improve functioning, expand range of usable cull wood, improve safety of operation and reduce fuel cost. A chip screen was installed between the chipper and the day storage bin.

Contributors:

Canada-New Brunswick:	$39,450
Maritime Forest Ranger School:	$13,150

Expected Benefits/Savings

- Reduced fuel bill is anticipated (compared to use of conventional oil); already 42% less before modifications.
- Forest management benefit through this demonstration of better use of wood waste.
- Widespread application in similar structures in small forest industries.

Further Information:

- pamphlet in both official languages;
- on-site tours;
- newsletters and bulletins;
- slide/tape presentation;
- final report

Information Contact:

Mr. G.A. Walsh
Maritime Forest Ranger School R.R. #5
Fredericton, N.B.
E3B 4X6

Telephone: (506) 454-4363

OR

Mr. Maurice Robichaud
Energy Secretariat
P.O. Box 6000
Fredericton, N.B. E3B 5H1

Telephone: (506) 453-3897

Project Title

Wood Chip Fired Boiler

Economic Analysis:

Project Costs

- Capital Equipment and Installation	$50,100
- Monitoring and Information Transfer	$ 2,500
Total Demonstration Costs	$52,600

Energy Impact: - 700 cords of top-grade wood at a cost of $35,000 per year. Replaced by a 50-50 mix of slabs and cull roundwood at a total cost of $12,250 resulting in an annual saving of $22,750 and a payback of 2.2 years.

Monitoring/Evaluation:

Monitoring to provide data related to pounds/hour consumption, moisture content of chips, equivalent oil consumption, dollar savings over present system.

Technical Details/Specifications:

DEVELOPMENTAL:

- Recirculated water from condensate-return tank through oil-fired back-up system;
- Replaced broken flights in storage bin drag chains and installed modified hold down pipes;
- Hinged wall of chip storage bin and installed hydraulic pistons;
- A second metering bin level control added and control location changed to eliminate control failures.

MODIFICATIONS:

- Install chip screen between chipper and storage bin and install dust collector.

Schematic Diagram:

1 Installed chip screen and blower to eliminate chip feeding problems.
2 Modified drag chains to improve effectiveness.
3 Installed hot water recirculation system to eliminate stand-by system from cycling on oil.
4 Installed second metering bin levelling control to eliminate failures.
5 Installed hinged bin wall panel to eliminate chip bridging problem.
6 Modified chip dryer to improve efficiency.
(in progress Sept. 81)

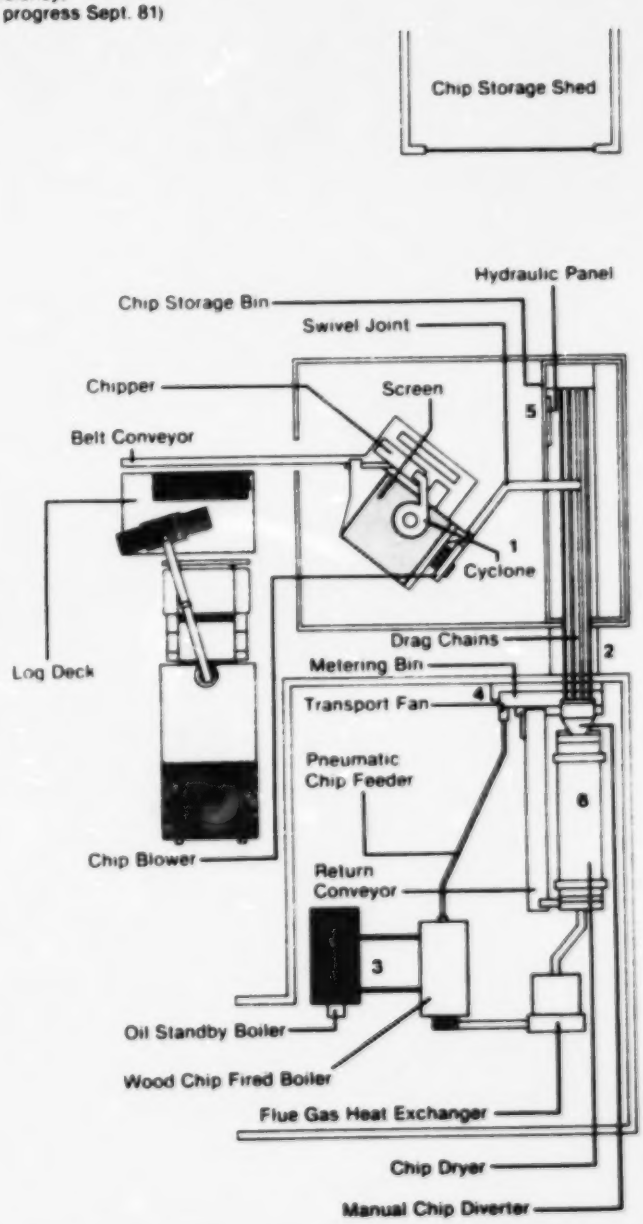

MARITIME FOREST RANGER SCHOOL

OVERVIEW

of

WOOD CHIP FIRED BOILER

Using

A Renewable Energy Resource

A PROJECT UNDER THE CONSERVATION AND
RENEWABLE ENERGY DEMONSTRATION PROGRAM
GOVERNMENTS OF NEW BRUNSWICK AND CANADA

October 1, 1981

MARITIME FOREST RANGER SCHOOL

OVERVIEW OF WOOD CHIP FIRED BOILER

USING

A RENEWABLE ENERGY RESOURCE

Pre-Ranger School

The University of New Brunswick burned wood from the time it was founded (1800) to the mid-1950's when campus growth prompted construction of an oil-fired central heating plant. Wood was burned in round, 4-foot lengths, in each building's individual furnace. Wood came from the UNB Forest of 3,000 productive acres about a mile from the campus.

Ranger School Experience

The Ranger School was built in 1946 and burned wood as a matter of course. Wood was readily available from the UNB Forest adjacent to the school, and burning wood was not uncommon at that time. By 1977 the two boilers (using round 4-foot wood) had reached the end of their service lives.

It was decided to continue to burn wood, but to burn it in chip form to eliminate the unpopular task of stoking 4-foot wood.

Replacement and Conversion of the System

In brief the project consisted of:

1) Conversion of a standby water boiler to oil as a back-up.

2) Installation of a 100 hp Matheson boiler, chipper, day chip bin, conveyors, chip dryer operated on stack heat and which can be bypassed, fuel metering bin, and air stream chip feed to boiler.

Salient Features of System

1. The MFRS plant occupies a niche between domestic and industrial heat plants.

2. Unlike industrial plants which typically carry level loads, the MFRS plant has thermostat controlled modulated burning.

...../ 2

3. In contrast to solid or roundwood burners which regulate burning by control of air alone, this system controls both air and fuel feed.

4. Chips burn cleanly with virtually no smoke and little ash.

Benefits

A. Forest Management

Like all forests in this region the UNB Forest needed and still needs weeding. It was weeded and is weeded, thanks to the opportunity to make good use of the weeds and trash unmerchantable by normal standards. No dollar value has been assigned to the forest management benefit but the value is reflected in the forest itself. The first UNB Forest inventory, done in 1914, showed 17,000 cords of wood. From 1914 to 1975, 60,000 cords were cut and the 1975 inventory showed 50,000 cords.

B. Economy

The 1978-79 start-up heating season worked according to Murphy's law. The 1979-30 winter season might be considered "normal" and saw a 33% reduction in fuel cost (42% on the basis of 1979-80 oil cost). Cost experience further improved during the 1980-81 season. Comparative data are shown in Appendix A and it should be remembered that domestic oil prices are below world prices.

The Future

The new system performs satisfactorily but changes were made during the 1980-81 heating seasons to further improve efficiency, under the aegis of the N.B. - Canada Energy Agreement. Items involved are shown in Appendix B.

Acknowledgements

The Ranger School made minimal technical input to the project and as in most developmental work, many have been involved. In the public sector DREE, Canadian Forestry Service, N.B. Energy Secretariat, N.B. Department of Natural Resources, MPHEC, and UNB Department of Chemical Engineering deserve special mention. In the private sector credit is due ADI Ltd., General Machine & Steel Works, M.L. Wilkins and Son, and a host of trades and service people, all of whom generated valuable ideas and suggestions.

October 1, 1981

APPENDIX A

MARITIME FOREST RANGER SCHOOL

HEATING COSTS - SEPTEMBER THROUGH APRIL

ACTUAL

Year	Degree Days	Wood(cds)	Cost	Oil(gals)	Cost	Tot.Cost
1978-79	4392	207	$ 4,562	33,840	$22,503	$27,065
1979-80	4142	727	15,631	1,900 1/	1,406	17,037
1980-81	4422 (+7%)	743	13,904	4,481 2/	4,164	18,068 (+6%)
1981-82	4480 (+1.3%)	694	13,622	2,744	3,460	17,082 (-5.5%)

DEGREE DAY BASIS

Year	Degree Days	Tot.Cost	Cost/Degree Day
1978-79	4392	$ 27,065	$ 6.16
1979-80	4142	17,037	4.11
1980-81	*4422	*18,068	*4.09
1981-82	4480	17,082	3.81
	*(+1.3%)	*(-5.5%)	*(-6.8%)

CURRENT OIL COST BASIS

The average oil price for 1978-79 was $0.665 per gal.
The average oil price for 1979-80 was 0.740 per gal.
The average oil price for 1980-81 was 0.929 per gal.
The average oil price for 1981-82 was 1.261 per gal.

(1) If 1979-80 oil prices were applied to 1978-79 consumption the total cost for 1978-79 heating would have been: $ 29,603

Actual total cost 1979-80 17,037

1978-79 saving (42%) based on then current oil cost $ 12,566

(2) Similarly, 1980-81 oil price applied to 1978-79 consumption gives a saving of $17,931 or 50% ($35,999-18,068).

(3) Applying 1981-82 oil price to 1979-80 consumption gives saving of $34,152 or 67% ($51,234-17,082).

1/ Oil required to keep standby unit up to temperature for prompt changeover if needed.

2/ For standby unit as above, plus heat on two weekends when main unit was down for repairs.

APPENDIX B

STATEMENT OF WORK

ITEM

I DEVELOPMENT

(a) Hot water recirculation (to reduce need for oil firing to keep standby unit to heat level)

(b) Correct drag chains

(c) Hinge wall of day bin (to prevent bridging)

(d) Metering bin control

II UPGRADING

Install chip screen to permit use of sawmill residues which cost about 1/3 as much as round wood.

APPENDIX 2

Equipment Specification

Dryer Fan

Canadian Blower, size 25 MW - 350°F construction 2000 c.f.m., 6" s.p. fan complete with 5 hp 3600 rpm motor on slide base, sheaves and drive belts. Fan speed is 2060 rpm. $ 1 600

I.D. Fan

Canadian Blower, size 35 MW - 850°F construction 4000 CFM, 2" SP fan complete with 5 hp 1800 rpm motor on slide base, sheaves and drive belts. Fan speed is 1050 rpm. 2 300

Chipper Assembly

Chipper, blowpipe, cyclone, chip screen and chip blower. This equipment is mounted on a 6" thick by 85 sq ft concrete pad. It is generally as shown on General Machine and Steel Works Ltd. Drawing #WHE-024 Rev 0 and WHE-021 Rev 1. Price is for supply, fabrication and installation. 34 000

Heat Exchanger

Air-to-air heat exchanger as shown on Century Steel and Boiler Ltd. (Saint John, N.B.) Drawing #526-1000. Heat exchanger is 31" Ø x 144" long and contains 96-2" od x 16 ga x 100" long tubes. Price is for supply, fabrication and installation. 23 000

Chip Storage

Chip storage bin (830 cu ft) and drag chains (4). This is shown on Century Steel and Boiler Ltd. Drawing #526-100. Price is for supply, fabrication and installation. 24 000

Metering Bin

Metering bin, complete with 12" pitch feed screw, screw drive arrangement, transport fan and interconnecting chutes. Metering bin is approximately 75 ft^3 (filled flush). This is shown on Century Steel and Boiler Ltd. drawing #526-200-1. Price is for supply, fabrication and installation. 16 000

Chip Dryer

Chip dryer drum complete with drive, support and 4 trunnion rollers. Dryer drum is 15' long x 4' I.D. Dryer is covered with 2" of insulation and includes two stationary end caps. All of this is as shown on Century Steel and Boiler Ltd. Drawing #526-300 and #526-700-2 and -3. Price is for supply fabrication and installation.	$ 18 000

Return Conveyor

Also associated with the chip drum dryer and parts is a return conveyor complete with its drive. This is shown on Century Steel Drawing 526-400. Price is for supply, fabrication and installation.	4 500

Wood-Fired Boiler

One wood-fired size S-800 welded boiler with 839 ft^2 of heating surface and 15 psi working pressure. Supplier is I. Matheson & Co. Ltd. from New Glasgow, N.S. This is shown on I. Matheson and Co. Ltd. Drawing #745-E. Price is for supply, fabrication and installation and is less burner, grates, base and insulation.	14 000
Base and insulation for above boiler	15 000
Chipper Room	22 500
Log feed rubber belted conveyor. Price is for supply, fabrication and installation.	6 000
Standby 100 hp H.R.T. fire tube boiler (ready to fire) installed price	25 000
Instrument air compressor	1 000
Condensate return tank and pump set	3 000
Stack 20" Ø x 40' high, Selkirk or Projet. Price installed	5 000
2000 gallon oil storage tank and fittings installed	5 000
Miscellaneous breeching	10 000

All necessary electrical work (power, controls, and interlocks) installed	$ 80 000
Heat transfer package complete with controls, expansion tank, convertor, air separator circulating pump. Installed price.	10 000
Engineering	20 000
Miscellaneous - 6% of above items	20 000
	$359 900

APPENDIX 3

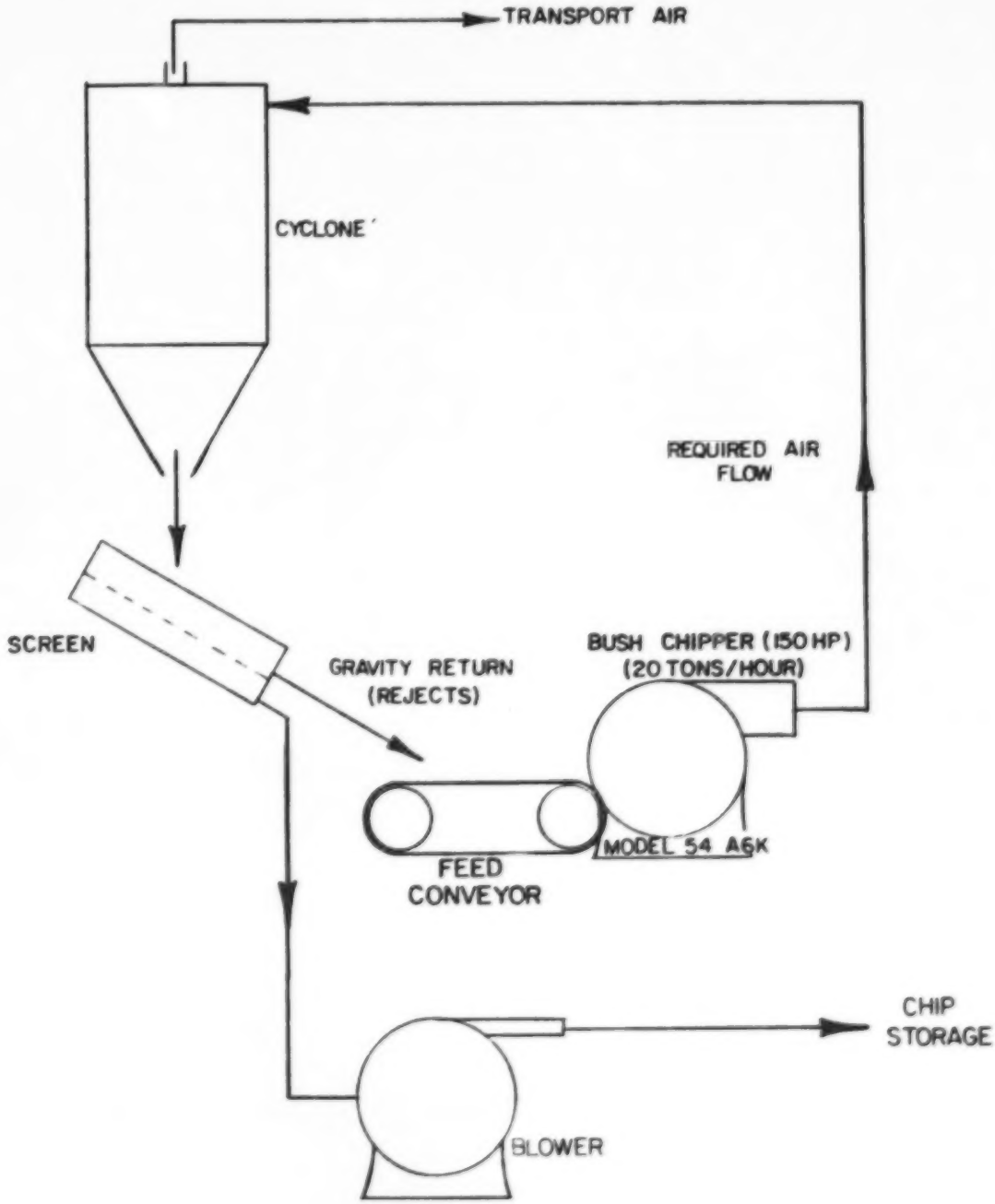

JOB				
MARITIME FOREST RANGER SCHOOL		ADI Limited Architects · Engineers · Surveyors Management Consultants · Planners 506—454-4491 · 1115 Regent St. · Fredericton, N.B.		
DRG. SCREEN	DRN. BY A.M.	SCALE	DATE 17/04/80	DRG. No. FIGURE 2 132-20

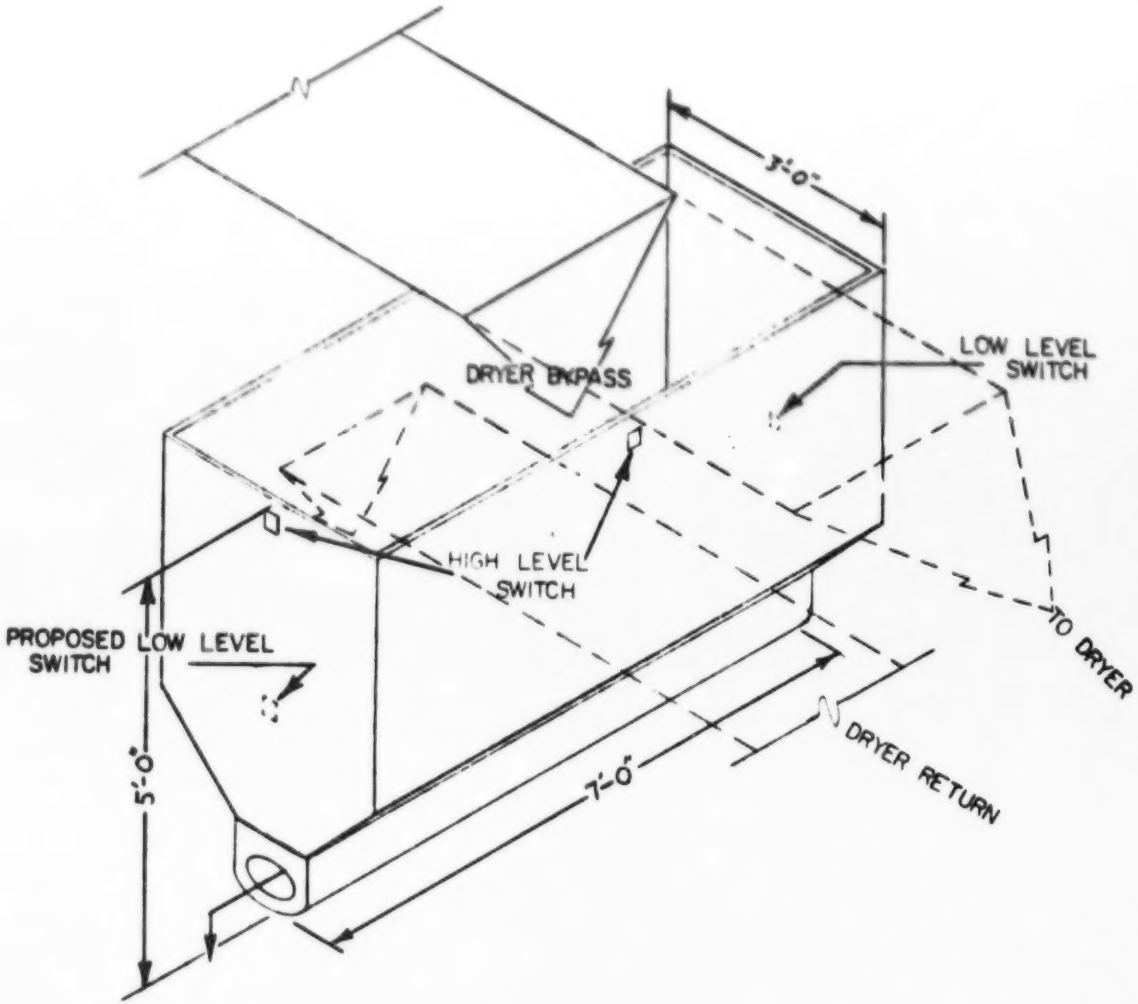

JOB

MARITIME FOREST RANGER SCHOOL

ADI Limited
Architects · Engineers · Surveyors
Management Consultants · Planners
506 — 454 · 4491 · 1115 Regent St. · Fredericton, N.B.

DRG.

WOOD METERING BIN LEVEL CONTROL

DRN. BY	SCALE	DATE	DRG. No.
RJM	½"=1'-0"		132-20 SK 3

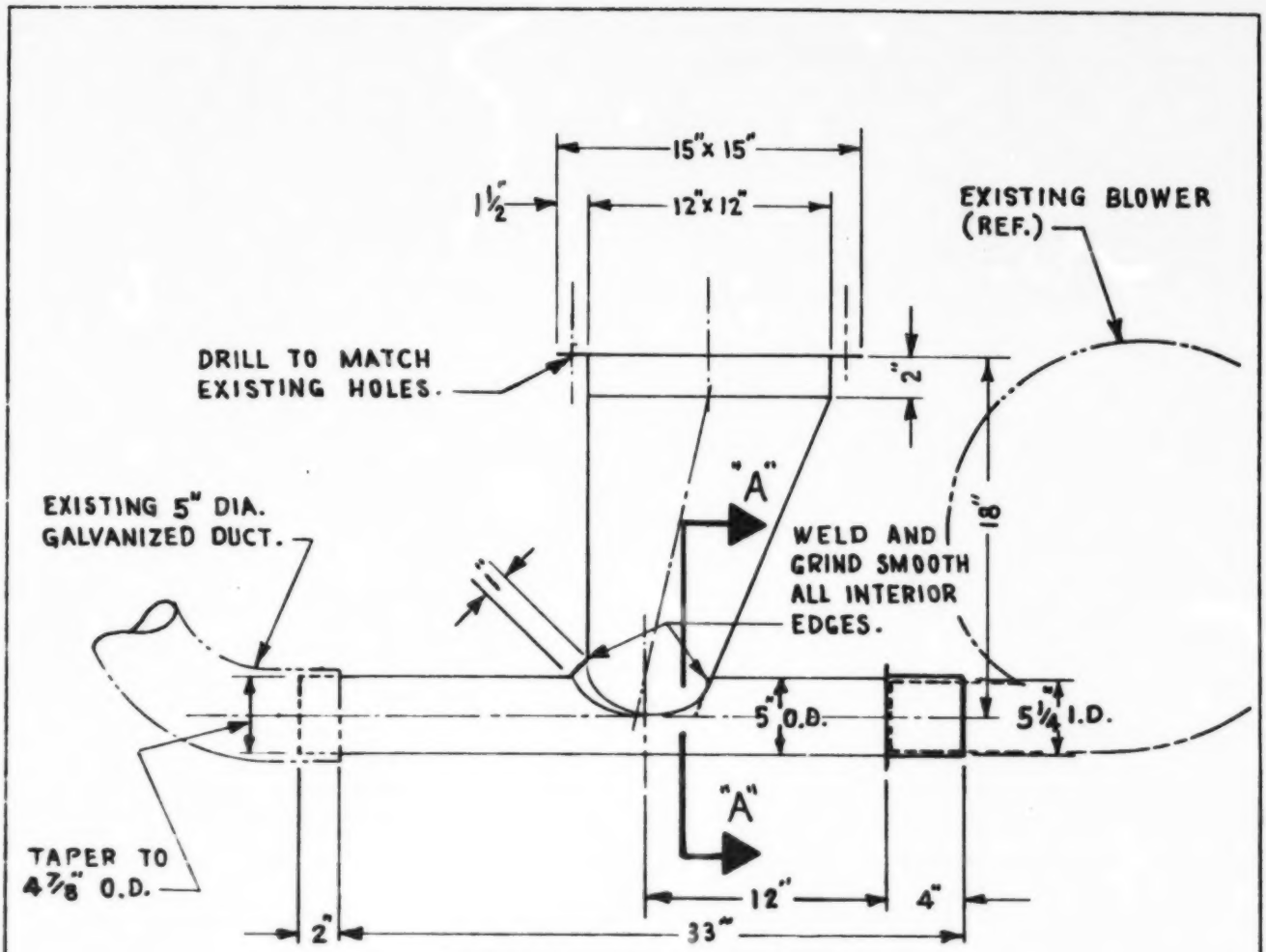

REPLACEMENT HOPPER

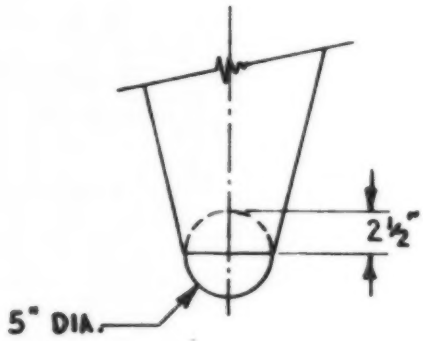

SECTION "A-A"

NOTE:
FABRICATE OF 16 GA. GALVANIZED SHEET STEEL.

NO	DATE	REVISION
1	82-8-20	REVISED AS BUILT

Job: MARITIME FOREST RANGER SCHOOL WOOD CHIP BOILER SYSTEM	ADI Limited — Engineers Architects Management Consultants Planners Surveyors (506) 454 4491 1115 Regent Street Fredericton N.B.	Drn by: RCP	Scale: 1½" = 1'-0"	Date: 82/02/01
Drawing: REPLACEMENT PNEUMATIC FEED HOPPER		Drawing No. 132-20-100 1		

ADI 7-103

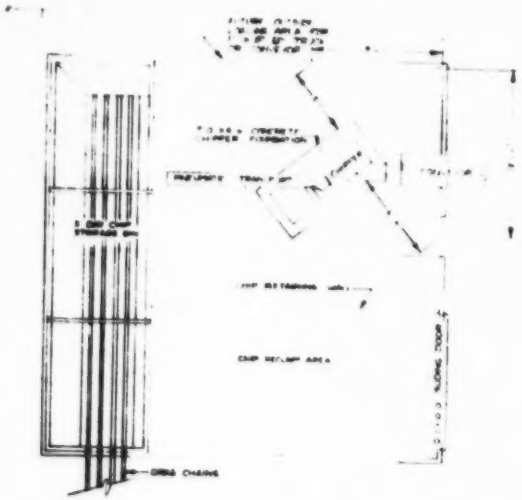

FLOOR PLAN

ELEVATION VIEW

NOTES:

1. WOOD CHIP SCREEN AND ASSOCIATED EQUIPMENT MUST BE INSTALLED WITHIN THE AREA BOUNDED BY THE DAY BIN, CHIP RETAINING WALL, AND THE EAST AND SOUTH WALLS OF THE CHIP STORAGE BUILDING.
2. VERTICAL DIMENSIONS LIMITED BY CEILING HEIGHT.
3. THE EXISTING EQUIPMENT IN THE WOOD CHIP BUILDING MUST NOT BE MOVED.

ADI Limited
Engineers, Architects
Management Consultants
Planners, Surveyors

MARITIME FOREST RANGER SCHOOL

MODIFICATIONS TO WOOD FIRED HEATING SYSTEM

WOOD CHIP SCREENING EQUIPMENT

AUGUST/1980

132-20 | 132 20-M1 | 0

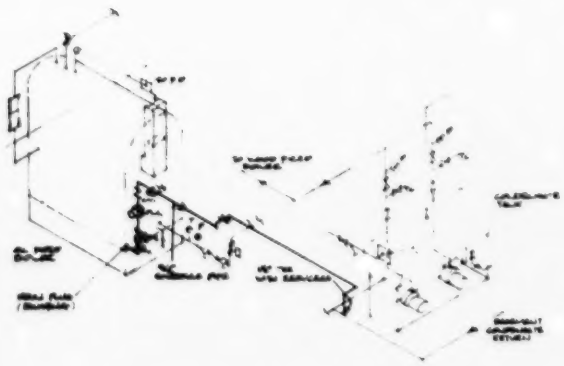

STANDBY BOILER HEATING SYSTEM

NOTE:
1. USE EXISTING PIPE HANGERS WHEREVER POSSIBLE
2. ROUTING OF PIPE TO BE VERIFIED ON SITE

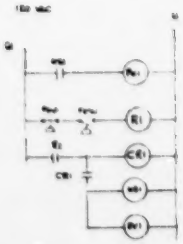

ELECTRICAL SCHEMATIC DIAGRAM

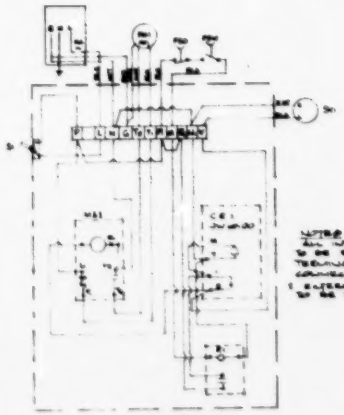

WIRING DIAGRAM

NOTES:
ALL INTERNAL CONTROL WIRING TO BE 8 W AWG STRANDED AND TERMINATED WITH SPADE LUG CONNECTORS
2. EXTERNAL CONTROL WIRING TO BE 8 W AWG BW 90

MATERIAL LIST

ITEM	[illegible]	[illegible]	DESCRIPTION
1	[illegible]	1	[illegible]
2	[illegible]	1	[illegible]
3	[illegible]	1	[illegible]
4	[illegible]	1	[illegible]
5	[illegible]	1	[illegible]
6	[illegible]	1	[illegible]
7	[illegible]	1	[illegible]
8	[illegible]	1	[illegible]
9	[illegible]	1	[illegible]
10	[illegible]	2	[illegible]
11	[illegible]	1	[illegible]
12	[illegible]	[illegible]	[illegible]
13	[illegible]	1	[illegible]
14	[illegible]	2	[illegible]
15	[illegible]	4	[illegible]

Maritime Forest Ranger School

FREDERICTON N.B.

Oil Fired Boiler Preheating System

132-30

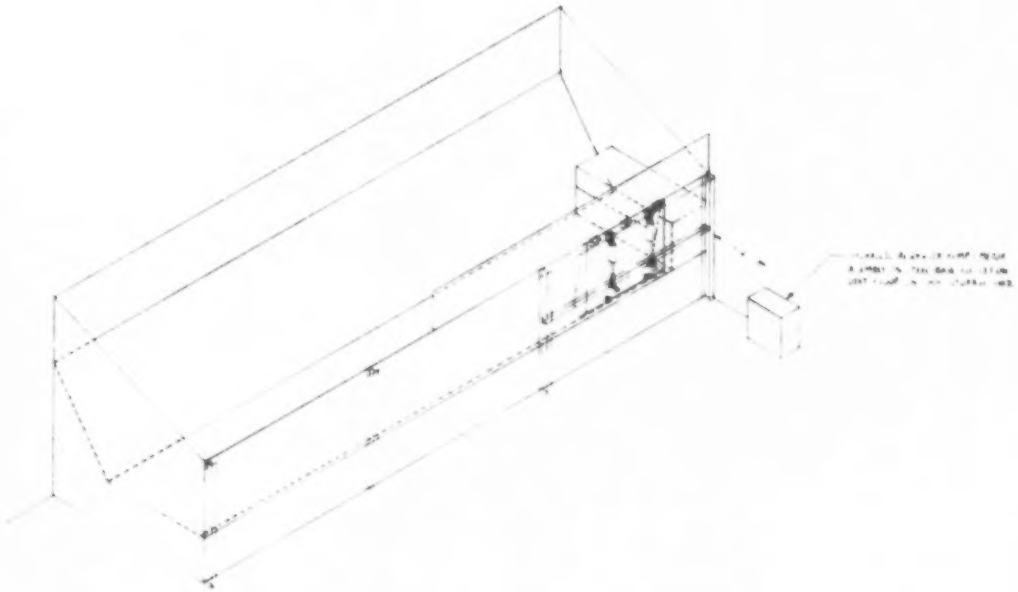

ADI Limited
Engineers, Architects
Management Consultants
Planners, Surveyors
1115 Regent Street
Fredericton N.B.

Project Title
Maritime Forest Ranger School
Fredericton N.B.

Drawing Title
MARITIME FOREST RANGER SCHOOL
Isometric- Proposed Chip Bin
Hinged Wall Panel - Phase 1

Scale
3/8":1'-0"

Drn. By C.J.C.
Date July '81

Job No.	Drwg. No.	Rev. No.
132-20	M-3	0

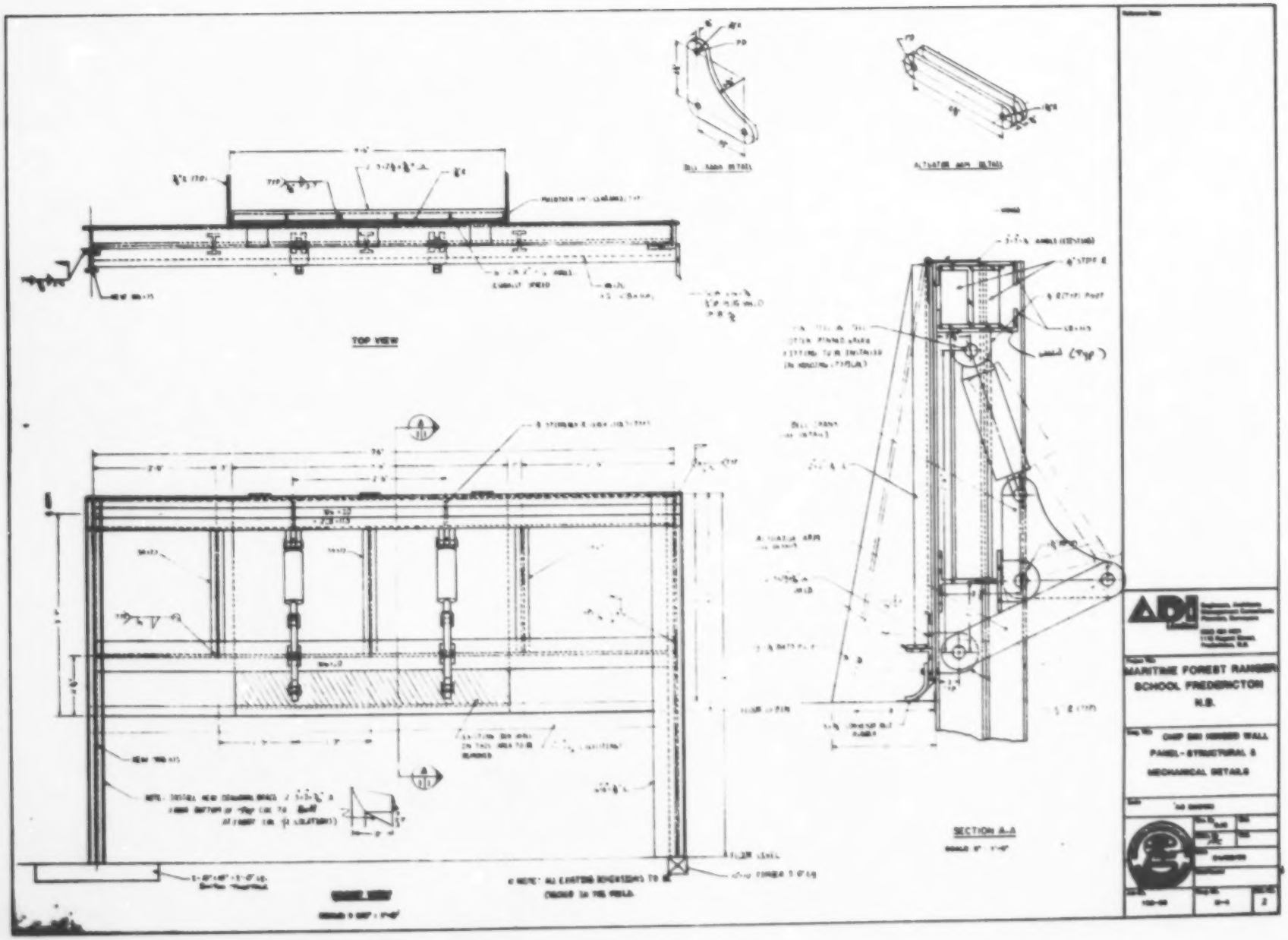
TOP VIEW
SECTION A-A
MARITIME FOREST RANGER
SCHOOL FREDERICTON
N.B.
PANEL - STRUCTURAL &
MECHANICAL DETAILS

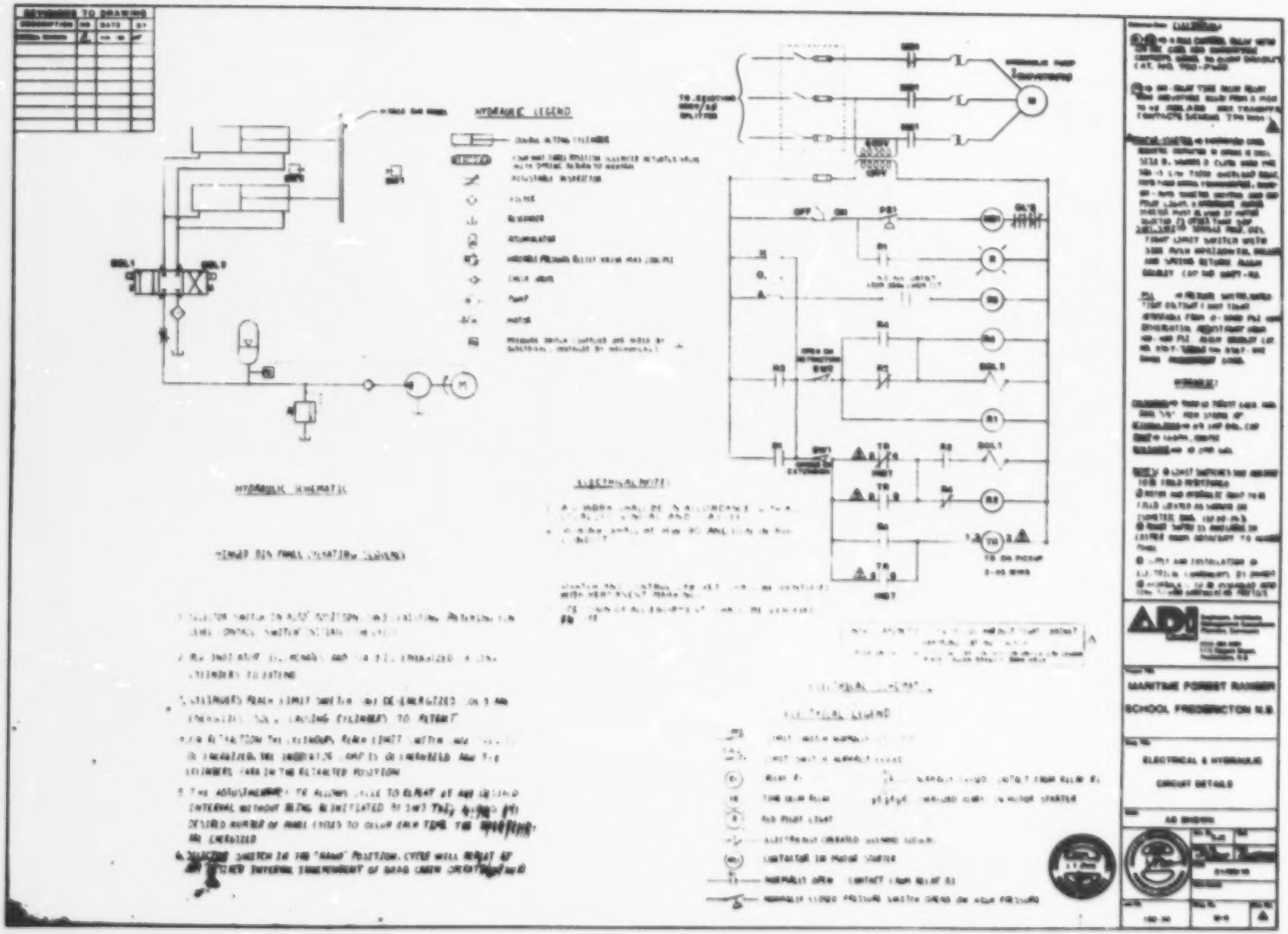
REVISIONS TO DRAWING
HYDRAULIC LEGEND
HYDRAULIC SCHEMATIC
ELECTRICAL NOTES
ELECTRICAL LEGEND
TO ON PICKUP
MARITIME FOREST RANGER
SCHOOL FREDERICTON N.B.
ELECTRICAL & HYDRAULIC
CIRCUIT DETAILS
AS SHOWN

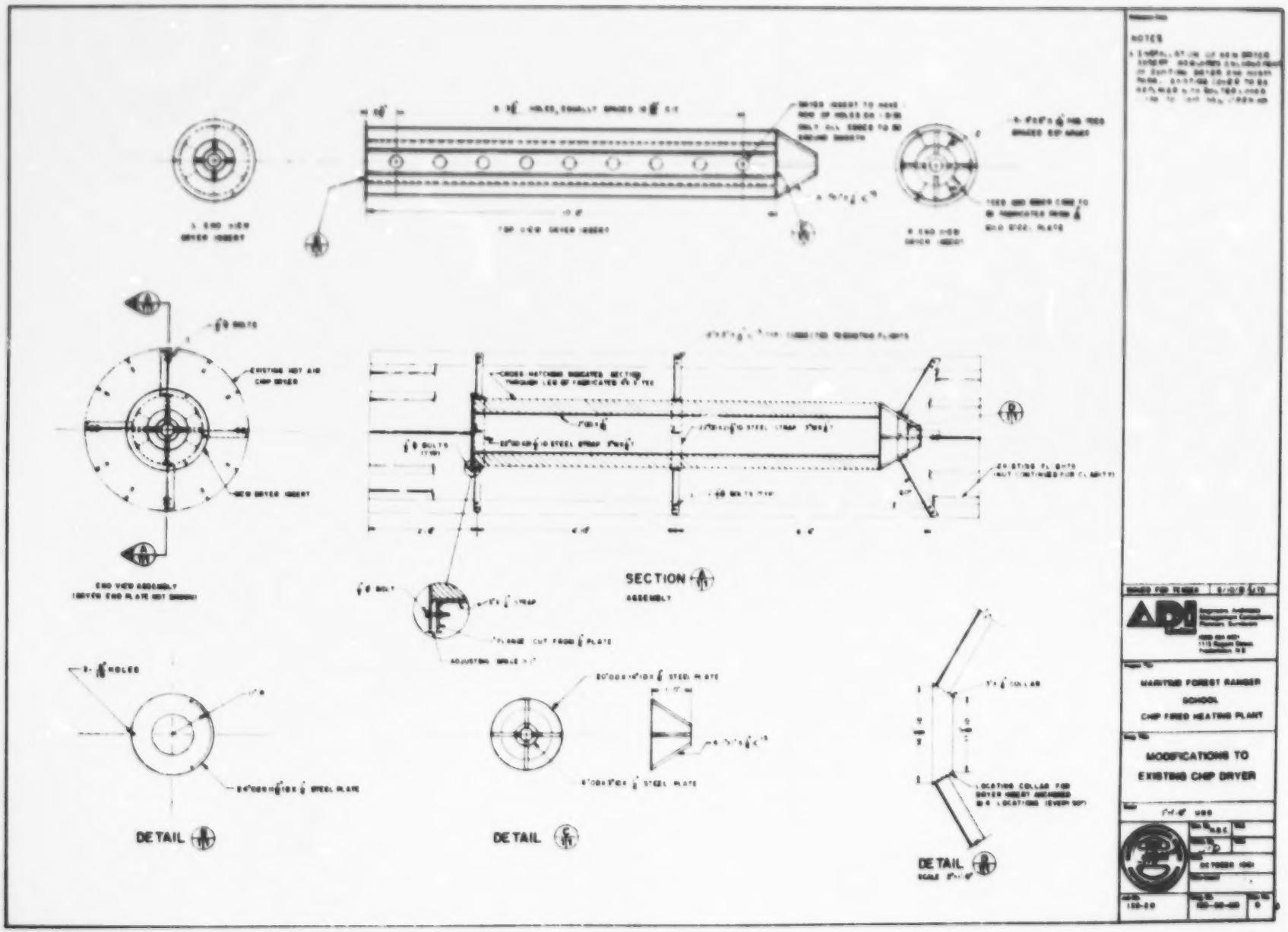
NOTES
SECTION
ASSEMBLY
DETAIL
DETAIL
DETAIL
MARITIME FOREST RANGER
SCHOOL
CHIP FIRED HEATING PLANT
MODIFICATIONS TO
EXISTING CHIP DRYER

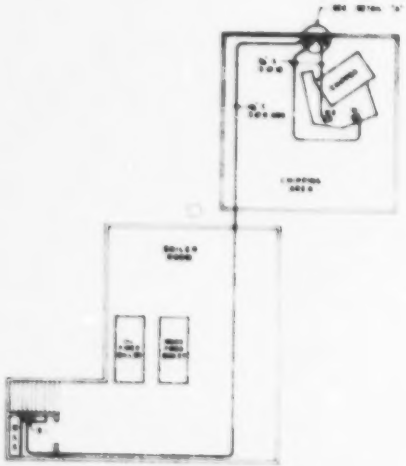

EQUIPMENT LAYOUT

SINGLE LINE DIAGRAM

DETAIL "A"

CONTROL SCHEMATIC 1

CHIP SCREEN ELECTRICAL

MARITIME FOREST RANGER SCHOOL

FINAL REPORT EVALUATION

Dear Sir or Madam,

Your co-operation in filling out this evaluation sheet would be appreciated and will help us in improving the quality of future Final Reports.

NAME _____

COMPANY/AFFILIATION _____

ADDRESS _____

(1) How would you rate the content of this report:

Too general ___ Too technical ___ Just Right ___

(2) Do you feel this Final Report could be of benefit
to you? Yes ___ No ___
to others? Yes ___ No ___

If so, who? _____

(3) Has this Final Report convinced you to take action to reduce energy consumption or adopt a renewable energy technology?

Yes ___ No ___

If so, what action do you plan to take? _____
_____

(4) How would you rate this Final Report?

Poor ___ Fair ___ Good ___ Very Good ___ Excellent ___

(5) How could it have been improved? _____
_____
_____

Please return completed evaluation to:

Maurice Robichaud
Director of Communications
Energy Secretariat
P.O. Box 6000
Fredericton, N.B. E3B 5H1

POOR

QUALITY

ORIGINAL